# SUN2000-(20KTL, 29.9KTL, 30KTL, 36KTL, 40KTL)-M3 Series

# User Manual

| | |
|---|---|
| **Issue** | 20 |
| **Date** | 2024-12-17 |

**HUAWEI TECHNOLOGIES CO., LTD.**

**Copyright © Huawei Technologies Co., Ltd. 2024. All rights reserved.**

No part of this document may be reproduced or transmitted in any form or by any means without prior written consent of Huawei Technologies Co., Ltd.

## Trademarks and Permissions

HUAWEI and other Huawei trademarks are trademarks of Huawei Technologies Co., Ltd.
All other trademarks and trade names mentioned in this document are the property of their respective holders.

## Notice

The purchased products, services and features are stipulated by the contract made between Huawei and the customer. All or part of the products, services and features described in this document may not be within the purchase scope or the usage scope. Unless otherwise specified in the contract, all statements, information, and recommendations in this document are provided "AS IS" without warranties, guarantees or representations of any kind, either express or implied.

The information in this document is subject to change without notice. Every effort has been made in the preparation of this document to ensure accuracy of the contents, but all statements, information, and recommendations in this document do not constitute a warranty of any kind, express or implied.


# Huawei Technologies Co., Ltd.

Address: Huawei Industrial Base
Bantian, Longgang
Shenzhen 518129
People's Republic of China

Website: https://e.huawei.com

# About This Document

## Purpose

This document describes the following inverter models (also referred to as SUN2000) in terms of the safety precautions, product introduction, installation, electrical connections, power-on and commissioning, maintenance, and technical specifications. Read this document carefully before installing and operating the inverter.

- SUN2000-20KTL-M3
- SUN2000-20KTL-BRM3
- SUN2000-29.9KTL-M3
- SUN2000-30KTL-M3
- SUN2000-30KTL-BRM3
- SUN2000-36KTL-M3
- SUN2000-40KTL-M3
- SUN2000-40KTL-BRM3

## Intended Audience

This document is intended for:

- Installers
- Users

## Symbol Conventions

The symbols that may be found in this document are defined as follows.

| Symbol | Description |
|---|---|
| DANGER | Indicates a hazard with a high level of risk which, if not avoided, will result in death or serious injury. |
| WARNING | Indicates a hazard with a medium level of risk which, if not avoided, could result in death or serious injury. |

 Copyright © Huawei Technologies Co., Ltd. 

| Symbol | Description |
| --- | --- |
| CAUTION | Indicates a hazard with a low level of risk which, if not avoided, could result in minor or moderate injury. |
| NOTICE | Indicates a potentially hazardous situation which, if not avoided, could result in equipment damage, data loss, performance deterioration, or unanticipated results.<br>NOTICE is used to address practices not related to personal injury. |
| NOTE | Supplements the important information in the main text.<br>NOTE is used to address information not related to personal injury, equipment damage, and environment deterioration. |

# Change History

Changes between document issues are cumulative. The latest document issue contains all the changes made in earlier issues.

## Issue 20 (2024-12-17)

Updated **A Grid Codes**.

## Issue 19 (2024-08-20)

Updated **About This Document**.

Updated **1.2 Electrical Safety**.

Updated **2.1 Product Introduction**.

Updated **2.3 Label Description**.

Updated **3 Inverter Storage**.

Updated **4.3 Determining the Installation Position**.

Updated **5.2 Preparing Cables**.

Updated **10 Technical Specifications**.

Updated **A Grid Codes**.

Updated **G Dry Contact Scheduling**.

Updated **H Setting the Current Threshold for Triggering RCD Protection**.

 Copyright © Huawei Technologies Co., Ltd. 

## Issue 18 (2024-03-10)

Added **7.3.2 Setting Feed-in at Limited Current**.

Updated **A Grid Codes**.

## Issue 17 (2024-02-02)

Updated **10 Technical Specifications**.

## Issue 16 (2024-01-12)

Updated **2.2 Appearance**.

Updated **3 Inverter Storage**.

Updated **4.4 Moving the Inverter**.

Updated **5.1 Precautions**.

Updated **5.2 Preparing Cables**.

Updated **5.4 Connecting an AC Output Power Cable**.

Updated **5.5.1 Cable Connection Description**.

Updated **8.3 Alarm Reference**.

Updated **10 Technical Specifications**.

Updated **A Grid Codes**.

Updated **M Contact Information**.

Added **N Digital Power Customer Service**.

## Issue 15 (2023-11-08)

Updated **4.3 Determining the Installation Position**.

Updated **5.3 Connecting the PE Cable**.

Updated **5.7.1 Communication Modes**.

Updated **7 Human-Machine Interaction**.

Updated **10 Technical Specifications**.

## Issue 14 (2023-09-20)

Updated **5.5.1 Cable Connection Description**.

## Issue 13 (2023-04-28)

Updated **A Grid Codes**.

Added **L Locating Insulation Resistance Faults**.

Updated **M Contact Information**.

## Issue 12 (2023-02-28)

Updated **2.1 Product Introduction**.

Updated **5.2 Preparing Cables**.

Updated **5.6 (Optional) Installing the Smart Dongle**.

Updated **10 Technical Specifications**.

## Issue 11 (2023-01-10)

Updated **1 Safety Information**.

Updated **2.3 Label Description**.

Updated **4.2 Tools**.

Updated **7 Human-Machine Interaction**.

Updated **8.3 Alarm Reference**.

Updated **10 Technical Specifications**.

Added **M Contact Information**.

## Issue 10 (2022-09-26)

Updated **5.2 Preparing Cables**.

Updated **5.4 Connecting an AC Output Power Cable**.

## Issue 09 (2022-06-30)

Updated **5.2 Preparing Cables**.

Updated **5.4 Connecting an AC Output Power Cable**.

Updated **5.5 Connecting DC Input Power Cables**.

Updated **5.7.1 Communication Modes**.

Updated **7 Human-Machine Interaction**.

Updated **7.1.3 SmartLogger Networking**.

Updated **8.3 Alarm Reference**.

Updated **10 Technical Specifications**.

Added **J PV String Access Detection**.

## Issue 08 (2022-04-14)

Updated **5.2 Preparing Cables**.

Updated **5.7.1 Communication Modes**.

Updated **D Rapid Shutdown**.

 Copyright © Huawei Technologies Co., Ltd. 

## Issue 07 (2022-01-30)

Updated **4.3 Determining the Installation Position**.

Updated **8.2 Routine Maintenance**.

## Issue 06 (2022-01-04)

Updated **5.2 Preparing Cables**.

Updated **7.1.2 Creating a PV Plant and a User**.

Updated **7.3.1 Grid-tied Point Control**.

Updated **7.3.3 Apparent Power Control on the Inverter Output Side**.

Updated **10 Technical Specifications**.

Updated **A Grid Codes**.

## Issue 05 (2021-11-25)

Updated **5.4 Connecting an AC Output Power Cable**.

## Issue 04 (2021-07-25)

Updated **5.2 Preparing Cables**.

Updated **10 Technical Specifications**.

## Issue 03 (2021-04-15)

Updated **2.1 Product Introduction**.

Updated **5.2 Preparing Cables**.

Updated **5.5 Connecting DC Input Power Cables**.

Updated **10 Technical Specifications**.

## Issue 02 (2020-11-20)

Updated **2.3 Label Description**.

Updated **4.3 Determining the Installation Position**.

Updated **5.2 Preparing Cables**.

Updated **5.7.1 Communication Modes**.

Updated **10 Technical Specifications**.

## Issue 01 (2020-10-15)

This issue is the first official release.

 Copyright © Huawei Technologies Co., Ltd. 

# Contents

**About This Document** ..... ii

**1 Safety Information** ..... 1

1.1 Personal Safety ..... 2

1.2 Electrical Safety ..... 4

1.3 Environment Requirements ..... 7

1.4 Mechanical Safety ..... 8

**2 Overview** ..... 13

2.1 Product Introduction ..... 13

2.2 Appearance ..... 15

2.3 Label Description ..... 16

2.4 Working Principles ..... 19

2.4.1 Circuit Diagram ..... 19

2.4.2 Working Modes ..... 19

**3 Inverter Storage** ..... 21

**4 Installation** ..... 23

4.1 Checking Before Installation ..... 23

4.2 Tools ..... 24

4.3 Determining the Installation Position ..... 25

4.4 Moving the Inverter ..... 30

4.5 Installing the Mounting Bracket ..... 31

4.5.1 Support Mounting ..... 32

4.5.2 Wall Mounting ..... 33

4.6 Installing the Inverter ..... 34

**5 Electrical Connections** ..... 37

5.1 Precautions ..... 37

5.2 Preparing Cables ..... 38

5.3 Connecting the PE Cable ..... 41

5.4 Connecting an AC Output Power Cable ..... 43

5.5 Connecting DC Input Power Cables ..... 49

5.5.1 Cable Connection Description ..... 49

5.5.2 Connecting Cables to Amphenol Helios H4 Terminals ..... 51

 Copyright © Huawei Technologies Co., Ltd. 

5.5.3 Connecting Cables to Staubli MC4 Terminals ..... 52
5.6 (Optional) Installing the Smart Dongle ..... 54
5.7 Connecting Signal Cables ..... 57
5.7.1 Communication Modes ..... 59
5.7.2 (Optional) Connecting the RS485 Communications Cables to the Inverter ..... 61
5.7.3 (Optional) Connecting the RS485 Communications Cable to the Power Meter ..... 62
5.7.4 (Optional) Connecting the Power Grid Scheduling Signal Cable ..... 63
5.7.5 (Optional) Connecting the Rapid Shutdown Signal Cable ..... 64

**6 Commissioning ..... 66**
6.1 Checking Before Power-On ..... 66
6.2 System Power-On ..... 67

**7 Human-Machine Interaction ..... 70**
7.1 Scenario in Which SUN2000s Are Connected to the FusionSolar Smart PV Management System ..... 71
7.1.1 (Optional) Registering an Installer Account ..... 71
7.1.2 Creating a PV Plant and a User ..... 73
7.1.3 SmartLogger Networking ..... 74
7.2 Scenario in Which Inverters Connect to Other Management Systems ..... 74
7.3 Energy Control ..... 74
7.3.1 Grid-tied Point Control ..... 74
7.3.2 Setting Feed-in at Limited Current ..... 79
7.3.2.1 Connecting the App to the Inverter or Smart Dongle ..... 79
7.3.2.2 Scenario Where the App Connects to the SmartLogger ..... 80
7.3.3 Apparent Power Control on the Inverter Output Side ..... 82

**8 Maintenance ..... 83**
8.1 System Power-Off ..... 83
8.2 Routine Maintenance ..... 84
8.3 Alarm Reference ..... 85

**9 Handling the Inverter ..... 86**
9.1 Removing the SUN2000 ..... 86
9.2 Packing the SUN2000 ..... 86
9.3 Disposing of the SUN2000 ..... 86

**10 Technical Specifications ..... 87**

**A Grid Codes ..... 100**

**B Device Commissioning ..... 122**

**C Built-in PID Recovery ..... 125**

**D Rapid Shutdown ..... 127**

**E NS Protection ..... 128**

**F Resetting a Password ..... 129**

G Dry Contact Scheduling..... 130
H Setting the Current Threshold for Triggering RCD Protection..... 132
I AFCI..... 134
J PV String Access Detection..... 136
K Smart I-V Curve Diagnosis..... 139
L Locating Insulation Resistance Faults..... 140
M Contact Information..... 144
N Digital Power Customer Service..... 146
O Acronyms and Abbreviations..... 147

# 1 Safety Information

## Statement

**Before transporting, storing, installing, operating, using, and/or maintaining the equipment, read this document, strictly follow the instructions provided herein, and follow all the safety instructions on the equipment and in this document.** In this document, "equipment" refers to the products, software, components, spare parts, and/or services related to this document; "the Company" refers to the manufacturer (producer), seller, and/or service provider of the equipment; "you" refers to the entity that transports, stores, installs, operates, uses, and/or maintains the equipment.

The **Danger**, **Warning**, **Caution**, and **Notice** statements described in this document do not cover all the safety precautions. You also need to comply with relevant international, national, or regional standards and industry practices. **The Company shall not be liable for any consequences that may arise due to violations of safety requirements or safety standards concerning the design, production, and usage of the equipment.**

The equipment shall be used in an environment that meets the design specifications. Otherwise, the equipment may be faulty, malfunctioning, or damaged, which is not covered under the warranty. The Company shall not be liable for any property loss, personal injury, or even death caused thereby.

Comply with applicable laws, regulations, standards, and specifications during transportation, storage, installation, operation, use, and maintenance.

Do not perform reverse engineering, decompilation, disassembly, adaptation, implantation, or other derivative operations on the equipment software. Do not study the internal implementation logic of the equipment, obtain the source code of the equipment software, violate intellectual property rights, or disclose any of the performance test results of the equipment software.

**The Company shall not be liable for any of the following circumstances or their consequences:**

- The equipment is damaged due to force majeure such as earthquakes, floods, volcanic eruptions, debris flows, lightning strikes, fires, wars, armed conflicts, typhoons, hurricanes, tornadoes, and other extreme weather conditions.
- The equipment is operated beyond the conditions specified in this document.

 Copyright © Huawei Technologies Co., Ltd. 

- The equipment is installed or used in environments that do not comply with international, national, or regional standards.
- The equipment is installed or used by unqualified personnel.
- You fail to follow the operation instructions and safety precautions on the product and in the document.
- You remove or modify the product or modify the software code without authorization.
- You or a third party authorized by you cause the equipment damage during transportation.
- The equipment is damaged due to storage conditions that do not meet the requirements specified in the product document.
- You fail to prepare materials and tools that comply with local laws, regulations, and related standards.
- The equipment is damaged due to your or a third party's negligence, intentional breach, gross negligence, or improper operations, or other reasons not related to the Company.

## 1.1 Personal Safety

**DANGER**

Ensure that power is off during installation. Do not install or remove a cable with power on. Transient contact between the core of the cable and the conductor will generate electric arcs or sparks, which may cause a fire or personal injury.

**DANGER**

Non-standard and improper operations on the energized equipment may cause fire, electric shocks, or explosion, resulting in property damage, personal injury, or even death.

**DANGER**

Before operations, remove conductive objects such as watches, bracelets, bangles, rings, and necklaces to prevent electric shocks.

**DANGER**

During operations, use dedicated insulated tools to prevent electric shocks or short circuits. The dielectric withstanding voltage level must comply with local laws, regulations, standards, and specifications.

 Copyright © Huawei Technologies Co., Ltd. 

**WARNING**

During operations, wear personal protective equipment such as protective clothing, insulated shoes, goggles, safety helmets, and insulated gloves.

**Figure 1-1** Personal protective equipment

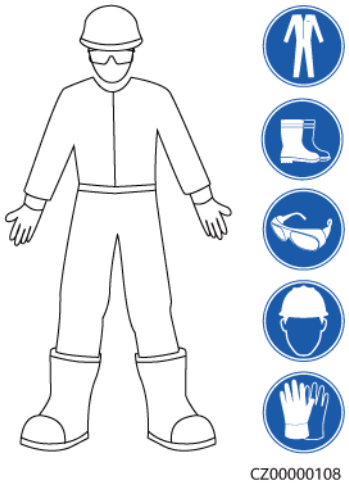


## General Requirements

- Do not stop protective devices. Pay attention to the warnings, cautions, and related precautionary measures in this document and on the equipment.
- If there is a likelihood of personal injury or equipment damage during operations, immediately stop, report the case to the supervisor, and take feasible protective measures.
- Do not power on the equipment before it is installed or confirmed by professionals.
- Do not touch the power supply equipment directly or with conductors such as damp objects. Before touching any conductor surface or terminal, measure the voltage at the contact point to ensure that there is no risk of electric shock.
- Do not touch operating equipment because the enclosure is hot.
- Do not touch a running fan with your hands, components, screws, tools, or boards. Otherwise, personal injury or equipment damage may occur.
- In the case of a fire, immediately leave the building or the equipment area and activate the fire alarm or call emergency services. Do not enter the affected building or equipment area under any circumstances.

## Personnel Requirements

- Only professionals and trained personnel are allowed to operate the equipment.
  - Professionals: personnel who are familiar with the working principles and structure of the equipment, trained or experienced in equipment operations and are clear of the sources and degree of various potential hazards in equipment installation, operation, maintenance

 Copyright © Huawei Technologies Co., Ltd. 

  - Trained personnel: personnel who are trained in technology and safety, have required experience, are aware of possible hazards on themselves in certain operations, and are able to take protective measures to minimize the hazards on themselves and other people
- Personnel who plan to install or maintain the equipment must receive adequate training, be able to correctly perform all operations, and understand all necessary safety precautions and local relevant standards.
- Only qualified professionals or trained personnel are allowed to install, operate, and maintain the equipment.
- Only qualified professionals are allowed to remove safety facilities and inspect the equipment.
- Personnel who will perform special tasks such as electrical operations, working at heights, and operations of special equipment must possess the required local qualifications.
- Only authorized professionals are allowed to replace the equipment or components (including software).
- Only personnel who need to work on the equipment are allowed to access the equipment.

## 1.2 Electrical Safety

**DANGER**

Before connecting cables, ensure that the equipment is intact. Otherwise, electric shocks or fire may occur.

**DANGER**

Non-standard and improper operations may result in fire or electric shocks.

**DANGER**

Prevent foreign matter from entering the equipment during operations. Otherwise, equipment short-circuits or damage, load power derating, power failure, or personal injury may occur.

**WARNING**

For the equipment that needs to be grounded, install the ground cable first when installing the equipment and remove the ground cable last when removing the equipment.

 Copyright © Huawei Technologies Co., Ltd. 

**WARNING**

During the installation of PV strings and the inverter, the positive or negative terminals of PV strings may be short-circuited to ground if the power cables are not properly installed or routed. In this case, an AC or DC short circuit may occur and damage the inverter. The resulting device damage is not covered under any warranty.

**CAUTION**

Do not route cables near the air intake or exhaust vents of the equipment.

## General Requirements

- Follow the procedures described in the document for installation, operation, and maintenance. Do not reconstruct or alter the equipment, add components, or change the installation sequence without permission.
- Obtain approval from the national or local electric utility company before connecting the equipment to the grid.
- Observe the power plant safety regulations, such as the operation and work ticket mechanisms.
- Install temporary fences or warning ropes and hang "No Entry" signs around the operation area to keep unauthorized personnel away from the area.
- Before installing or removing power cables, turn off the switches of the equipment and its upstream and downstream switches.
- Before performing operations on the equipment, check that all tools meet the requirements and record the tools. After the operations are complete, collect all of the tools to prevent them from being left inside the equipment.
- Before installing power cables, check that cable labels are correct and cable terminals are insulated.
- When installing the equipment, use a torque tool of a proper measurement range to tighten the screws. When using a wrench to tighten the screws, ensure that the wrench does not tilt and the torque error does not exceed 10% of the specified value.
- Ensure that bolts are tightened with a torque tool and marked in red and blue after double-check. Installation personnel mark tightened bolts in blue. Quality inspection personnel confirm that the bolts are tightened and then mark them in red. (The marks must cross the edges of the bolts.)

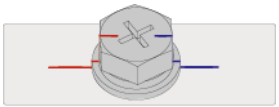

CZ0000112

- If the equipment has multiple inputs, disconnect all the inputs and wait until the equipment is completely powered off before performing operations on the equipment.
- Before maintaining a downstream electrical or power distribution device, turn off the output switch on the power supply equipment.

 Copyright © Huawei Technologies Co., Ltd. 

- During equipment maintenance, attach "Do not switch on" labels near the upstream and downstream switches or circuit breakers as well as warning signs to prevent accidental connection. The equipment can be powered on only after troubleshooting is complete.
- Do not open equipment panels.
- Check equipment connections periodically, ensuring that all screws are securely tightened.
- Only qualified professionals can replace a damaged cable.
- Do not scrawl, damage, or block any labels or nameplates on the equipment. Promptly replace labels that have worn out.
- Do not use solvents such as water, alcohol, or oil to clean electrical components inside or outside of the equipment.
- The surge protection of the PV system and the building where the PV system is installed shall comply with local standards.

## Grounding

- Ensure that the grounding impedance of the equipment complies with local electrical standards.
- Ensure that the equipment is connected permanently to the protective ground. Before operating the equipment, check its electrical connection to ensure that it is reliably grounded.
- Do not work on the equipment in the absence of a properly installed ground conductor.
- Do not damage the ground conductor.

## Cabling Requirements

- When selecting, installing, and routing cables, follow local safety regulations and rules.
- When routing power cables, ensure that there is no coiling or twisting. Do not join or weld power cables. If necessary, use a longer cable.
- Ensure that all cables are properly connected and insulated, and meet specifications.
- Ensure that the slots and holes for routing cables are free from sharp edges, and that the positions where cables are routed through pipes or cable holes are equipped with cushion materials to prevent the cables from being damaged by sharp edges or burrs.
- Ensure that cables of the same type are bound together neatly and straight and that the cable sheath is intact. When routing cables of different types, ensure that they are away from each other without entanglement and overlapping.
- Secure buried cables using cable supports and cable clips. Ensure that the cables in the backfill area are in close contact with the ground to prevent cable deformation or damage during backfilling.
- If the external conditions (such as the cable layout or ambient temperature) change, verify the cable usage in accordance with the IEC-60364-5-52 or local laws and regulations. For example, check that the current-carrying capacity meets requirements.

 Copyright © Huawei Technologies Co., Ltd. 

- When routing cables, reserve at least 30 mm clearance between the cables and heat-generating components or areas. This prevents deterioration or damage to the cable insulation layer.

# 1.3 Environment Requirements

**DANGER**

Do not expose the equipment to flammable or explosive gas or smoke. Do not perform any operation on the equipment in such environments.

**DANGER**

Do not store any flammable or explosive materials in the equipment area.

**DANGER**

Do not place the equipment near heat sources or fire sources, such as smoke, candles, heaters, or other heating devices. Overheat may damage the equipment or cause a fire.

**WARNING**

Install the equipment in an area far away from liquids. Do not install it under areas prone to condensation, such as under water pipes and air exhaust vents, or areas prone to water leakage, such as air conditioner vents, ventilation vents, or feeder windows of the equipment room. Ensure that no liquid enters the equipment to prevent faults or short circuits.

**WARNING**

To prevent damage or fire due to high temperature, ensure that the ventilation vents or heat dissipation systems are not obstructed or covered by other objects while the equipment is running.

## General Requirements

- Store the equipment according to the storage requirements. Equipment damage caused by unqualified storage conditions is not covered under the warranty.
- Keep the installation and operating environments of the equipment within the allowed ranges. Otherwise, its performance and safety will be compromised.

 Copyright © Huawei Technologies Co., Ltd. 

- The operating temperature range provided in the equipment's technical specifications refers to the ambient temperatures in equipment's installation environment.
- Do not install, use, or operate outdoor equipment and cables (including but not limited to moving equipment, operating equipment and cables, inserting connectors to or removing connectors from signal ports connected to outdoor facilities, working at heights, performing outdoor installation, and opening doors) in harsh weather conditions such as lightning, rain, snow, and level 6 or stronger wind.
- Do not install the equipment in an environment with dust, smoke, volatile or corrosive gases, infrared and other radiations, organic solvents, or salty air.
- Do not install the equipment in an environment with conductive metal or magnetic dust.
- Do not install the equipment in an area conducive to the growth of microorganisms such as fungus or mildew.
- Do not install the equipment in an area with strong vibration, noise, or electromagnetic interference.
- Ensure that the site complies with local laws, regulations, and related standards.
- Ensure that the ground in the installation environment is solid, free from spongy or soft soil, and not prone to subsidence. The site must not be located in a low-lying land prone to water or snow accumulation, and the horizontal level of the site must be above the highest water level of that area in history.
- Do not install the equipment in a position that may be submerged in water.
- If the equipment is installed in a place with abundant vegetation, in addition to routine weeding, harden the ground underneath the equipment using cement or gravel (the area shall be greater than or equal to 3 m x 2.5 m).
- Do not install the equipment outdoors in salt-affected areas because it may be corroded. A salt-affected area refers to the region within 500 m of the coast or prone to sea breeze. Regions prone to sea breeze vary with weather conditions (such as typhoons and monsoons) or terrains (such as dams and hills).
- Before installation, operation, and maintenance, clean up any water, ice, snow, or other foreign objects on the top of the equipment.
- When installing the equipment, ensure that the installation surface is solid enough to bear the weight of the equipment.
- After installing the equipment, remove the packing materials such as cartons, foam, plastics, and cable ties from the equipment area.

## 1.4 Mechanical Safety

**WARNING**

Ensure that all necessary tools are ready and inspected by a professional organization. Do not use tools that have signs of scratches or fail to pass the inspection or whose inspection validity period has expired. Ensure that the tools are secure and not overloaded.

 Copyright © Huawei Technologies Co., Ltd. 

**WARNING**

Do not drill holes into the equipment. Doing so may affect the sealing performance and electromagnetic containment of the equipment and damage components or cables inside. Metal shavings from drilling may short-circuit boards inside the equipment.

## General Requirements

- Repaint any paint scratches caused during equipment transportation or installation in a timely manner. Equipment with scratches must not be exposed for an extended period of time.
- Do not perform operations such as arc welding and cutting on the equipment without evaluation by the Company.
- Do not install other devices on the top of the equipment without evaluation by the Company.
- When performing operations over the top of the equipment, take measures to protect the equipment against damage.
- Use correct tools and operate them in the correct way.

## Moving Heavy Objects

- Be cautious to prevent injury when moving heavy objects.

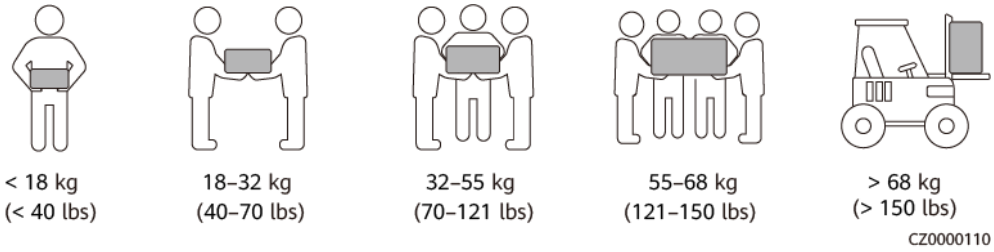


- If multiple persons need to move a heavy object together, determine the manpower and work division with consideration of height and other conditions to ensure that the weight is equally distributed.
- If two persons or more move a heavy object together, ensure that the object is lifted and landed simultaneously and moved at a uniform pace under the supervision of one person.
- Wear personal protective gears such as protective gloves and shoes when manually moving the equipment.
- To move an object by hand, approach to the object, squat down, and then lift the object gently and stably by the force of the legs instead of your back. Do not lift it suddenly or turn your body around.
- Do not quickly lift a heavy object above your waist. Place the object on a workbench that is half-waist high or any other appropriate place, adjust the positions of your palms, and then lift it.
- Move a heavy object stably with balanced force at an even and low speed. Put down the object stably and slowly to prevent any collision or drop from scratching the surface of the equipment or damaging the components and cables.

 Copyright © Huawei Technologies Co., Ltd. 

- When moving a heavy object, be aware of the workbench, slope, staircase, and slippery places. When moving a heavy object through a door, ensure that the door is wide enough to move the object and avoid bumping or injury.
- When transferring a heavy object, move your feet instead of turning your waist around. When lifting and transferring a heavy object, ensure that your feet point to the target direction of movement.
- When transporting the equipment using a pallet truck or forklift, ensure that the tynes are properly positioned so that the equipment does not topple. Before moving the equipment, secure it to the pallet truck or forklift using ropes. When moving the equipment, assign dedicated personnel to take care of it.
- Choose sea, roads in good conditions, or airplanes for transportation. Do not transport the equipment by railway. Avoid tilt or jolt during transportation.

## Using Ladders

- Use wooden or insulated ladders when you need to perform live-line working at heights.
- Platform ladders with protective rails are preferred. Single ladders are not recommended.
- Before using a ladder, check that it is intact and confirm its load bearing capacity. Do not overload it.
- Ensure that the ladder is securely positioned and held firm.

- When climbing up the ladder, keep your body stable and your center of gravity between the side rails, and do not overreach to the sides.
- When a step ladder is used, ensure that the pull ropes are secured.
- If a single ladder is used, the recommended angle for the ladder against the floor is 75 degrees, as shown in the following figure. A square can be used to measure the angle.

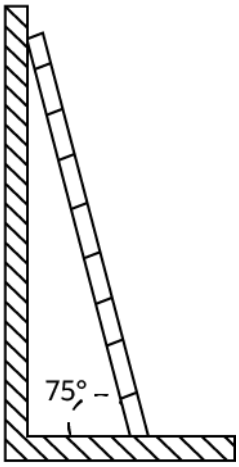


- If a single ladder is used, ensure that the wider end of the ladder is at the bottom, and take protective measures to prevent the ladder from sliding.
- If a single ladder is used, do not climb higher than the fourth rung of the ladder from the top.
- If you use a single ladder to climb up to a platform, ensure that the ladder is at least 1 m higher than the platform.

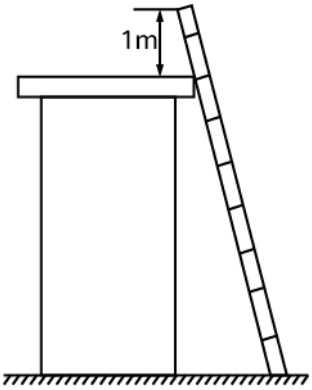


## Hoisting

- Only trained and qualified personnel are allowed to perform hoisting operations.
- Install temporary warning signs or fences to isolate the hoisting area.
- Ensure that the foundation where hoisting is performed on meets the load-bearing requirements.
- Before hoisting objects, ensure that hoisting tools are firmly secured onto a fixed object or wall that meets the load-bearing requirements.
- During hoisting, do not stand or walk under the crane or the hoisted objects.
- Do not drag steel ropes and hoisting tools or bump the hoisted objects against hard objects during hoisting.
- Ensure that the angle between two hoisting ropes is no more than 90 degrees, as shown in the following figure.

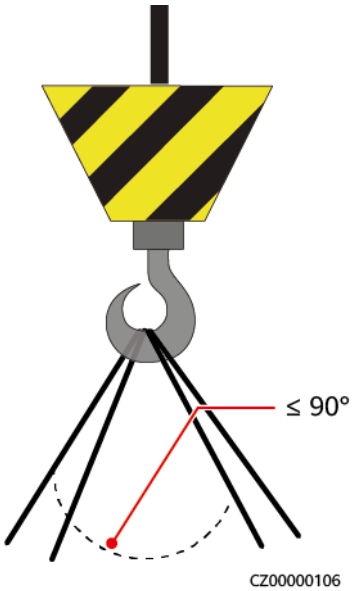


## Drilling Holes

- Obtain consent from the customer and contractor before drilling holes.
- Wear protective equipment such as safety goggles and protective gloves when drilling holes.
- To avoid short circuits or other risks, do not drill holes into buried pipes or cables.
- When drilling holes, protect the equipment from shavings. After drilling, clean up any shavings.

 Copyright © Huawei Technologies Co., Ltd. 

# 2 Overview

## 2.1 Product Introduction

### Function

The SUN2000 is a three-phase grid-tied PV string inverter that converts the DC power generated by PV strings into AC power and feeds the power into the power grid.

### Model

This document involves the following product models:

- SUN2000-20KTL-M3
- SUN2000-20KTL-BRM3
- SUN2000-29.9KTL-M3
- SUN2000-30KTL-M3
- SUN2000-30KTL-BRM3
- SUN2000-36KTL-M3
- SUN2000-40KTL-M3
- SUN2000-40KTL-BRM3

**NOTE**

The SUN2000-20KTL-M3 and SUN2000-20KTL-BRM3 support 220 V (line voltage) power grids.

**Figure 2-1** Model number (using SUN2000-30KTL-M3 as an example)

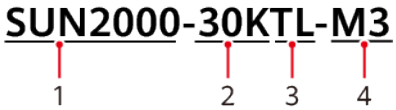

**Table 2-1** Model description

| No. | Meaning | Description |
|---|---|---|
| 1 | Product family identifier | SUN2000: grid-tied solar inverter |
| 2 | Power level identifier | • 20K: The rated power is 20 kW.<br>• 29.9K: The rated power is 29.9 kW<br>• 30K: The rated power is 30 kW.<br>• 36K: The rated power is 36 kW.<br>• 40K: The rated power is 40 kW. |
| 3 | Topology identifier | TL: transformerless |
| 4 | Product series identifier | M3: product series with an input voltage level of 1100 V DC[a] |
| 5 | Region identifier | BR: Brazil |

Note a: The maximum DC input voltage for the SUN2000-20KTL-M3 and SUN2000-20KTL-BRM3 is 800 V. For details, see **10 Technical Specifications**.

## Networking Application

The SUN2000 applies to grid-tied systems for commercial and industrial (C&I) rooftop projects and small-sized ground-mounted plants. The system consists of PV strings, grid-tied inverters, AC switches, and power distribution units (PDUs).

**Figure 2-2** Networking application – single inverter scenario

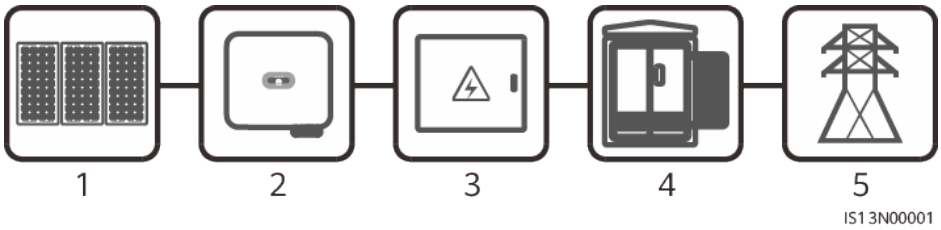


(1) PV string (2) SUN2000 (3) AC PDU

(4) Isolation transformer (5) Power grid

## Supported Earthing Systems

The SUN2000 supports the TN-S, TN-C, TN-C-S, TT, and IT earthing systems.

 Copyright © Huawei Technologies Co., Ltd. 

**Figure 2-3** Earthing systems

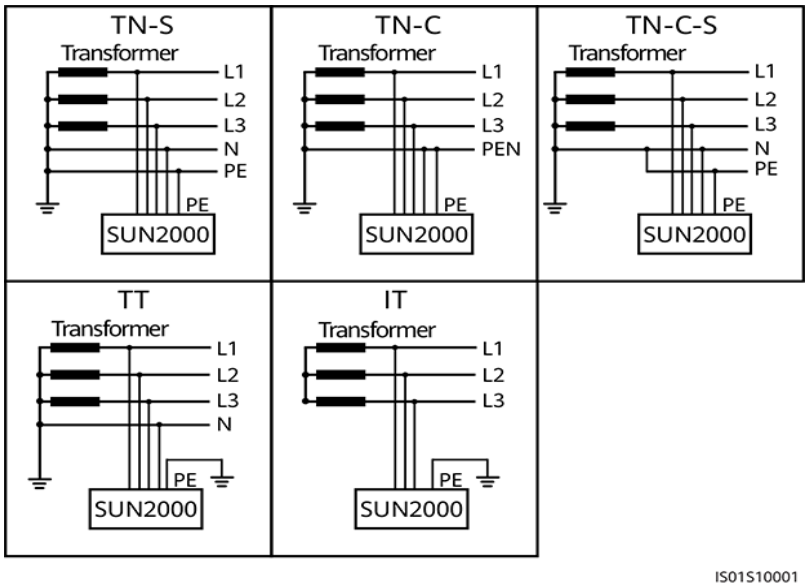


# 2.2 Appearance

**Figure 2-4** Appearance

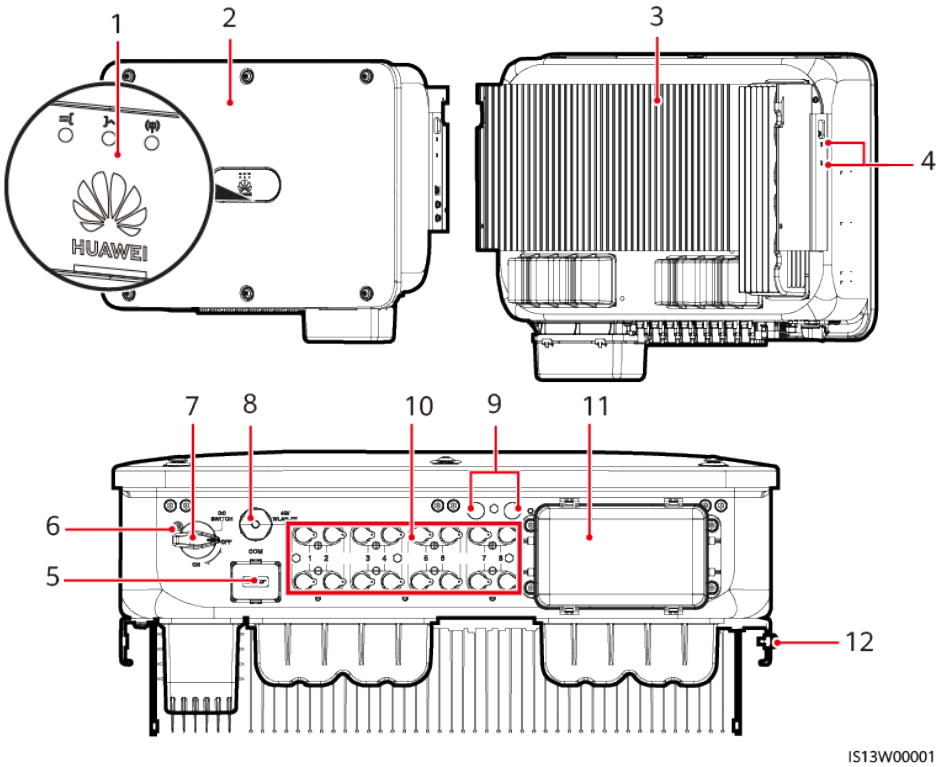


(1) LED indicators

(2) Front panel

(3) Heat sink

(4) Screw holes for fixing the sunshade

(5) Communications port (COM)

(6) Hole for the DC switch locking screw

(7) DC switch (DC SWITCH)

(8) Smart Dongle port (4G/WLAN-FE)

(9) Ventilation valves

(10) DC input terminals (PV1–PV8)

(11) AC output ports

(12) Ground point

## 2.3 Label Description

| Symbol | Name | Meaning |
|---|---|---|
| | Delayed discharge | • High voltage exists after the inverter is powered on. Only qualified and trained electrical technicians are allowed to perform operations on the inverter.<br>• Residual voltage exists after the inverter is powered off. It takes 15 minutes for the inverter to discharge to the safe voltage. |
| | High temperature hazard | Do not touch the inverter when it is running because its enclosure is hot. |

 Copyright © Huawei Technologies Co., Ltd. 

| Symbol | Name | Meaning |
|---|---|---|
| | Electric shock warning | • High voltage exists after the inverter is powered on. Only qualified and trained electrical technicians are allowed to perform operations on the inverter.<br>• High touch current exists after the inverter is powered on. Before powering on the inverter, ensure that the inverter is properly grounded. |
| | Refer to documentation | Reminds operators to refer to the documentation provided with the device. Losses caused by operations that do not comply with the requirements of site selection, storage, or mounting specified in the user manual are not covered under the warranty. |
| | Protective earthing | Indicates the position for connecting the protective earthing (PE) cable. |
| | Operation warning | Do not remove the DC input connector or AC output connector with power on. |
| | Device weight | The inverter is heavy and needs to be carried by three persons. |

| Symbol | Name | Meaning |
|---|---|---|
| | Inverter handle burn warning | Do not touch the handle within 10 minutes after the inverter shuts down. |
| 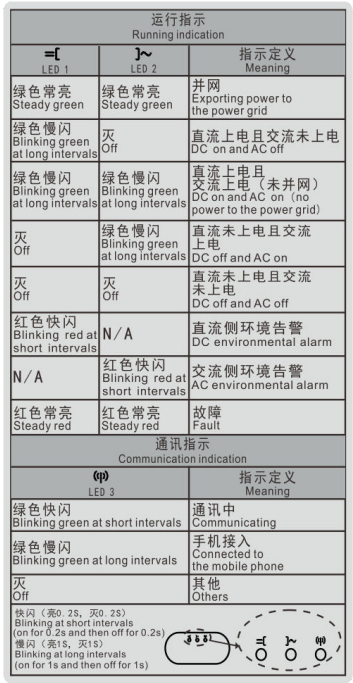 | Indicators | Indicates the inverter operating information. |
| 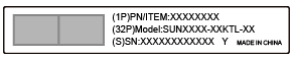 | Inverter SN | Indicates the inverter serial number. |
| | QR code for inverter WiFi connection | Scan the QR code to connect to the Huawei inverter WiFi. |

# 2.4 Working Principles

## 2.4.1 Circuit Diagram

The SUN2000 receives inputs from eight PV strings. Then the inputs are grouped into four MPPT circuits inside the SUN2000, with each MPPT circuit tracking the maximum power point of two PV strings. The DC power is then converted into single-phase AC power through an inverter circuit. Surge protection is supported on both the DC and AC sides.

**Figure 2-5** Schematic diagram

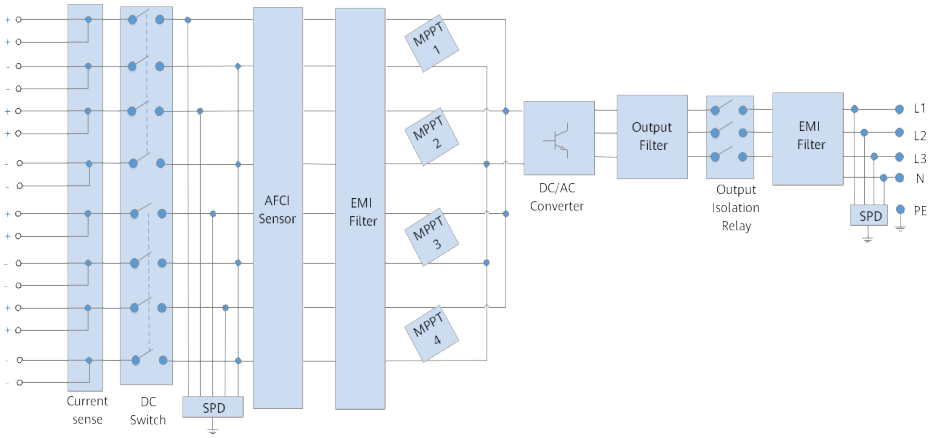


## 2.4.2 Working Modes

The SUN2000 can work in Standby, Operating, or Shutdown mode.

 Copyright © Huawei Technologies Co., Ltd. 

**Figure 2-6** Working modes

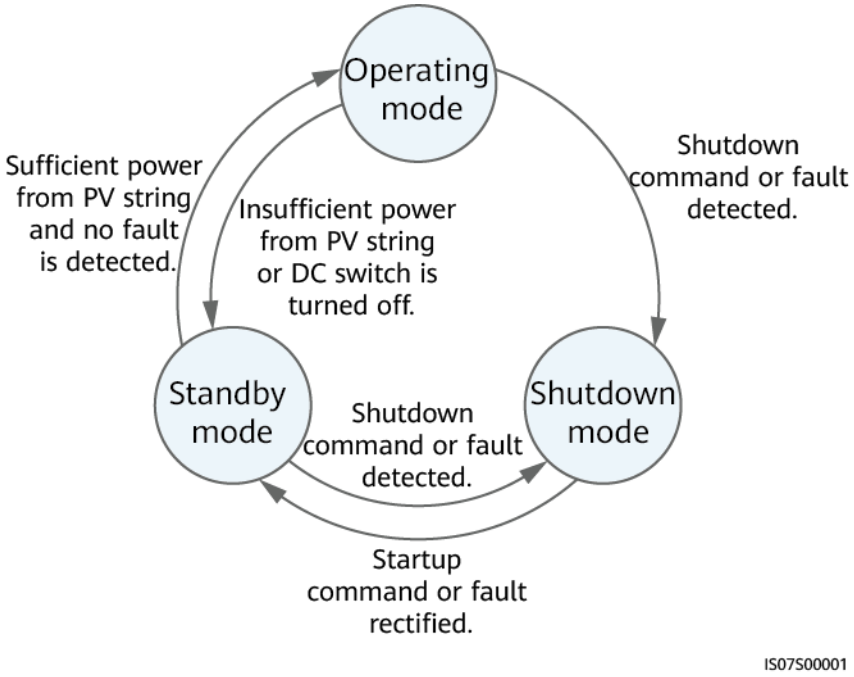


**Table 2-2** Working mode description

| Working Mode | Description |
|---|---|
| Standby | The SUN2000 enters Standby mode when the external environment does not meet the operating requirements. In Standby mode:<br>● The SUN2000 continuously performs status check and enters the Operating mode once the operating requirements are met.<br>● The SUN2000 enters Shutdown mode after detecting a shutdown command or a fault after startup. |
| Operating | In Operating mode:<br>● The SUN2000 converts DC power from PV strings into AC power and feeds the power to the power grid.<br>● The SUN2000 tracks the maximum power point to maximize the PV string output.<br>● If the SUN2000 detects a fault or a shutdown command, it enters the Shutdown mode.<br>● The SUN2000 enters Standby mode after detecting that the PV string output power is not suitable for connecting to the power grid for generating power. |
| Shutdown | ● In Standby or Operating mode, the SUN2000 enters Shutdown mode after detecting a fault or shutdown command.<br>● In Shutdown mode, the SUN2000 enters Standby mode after detecting a startup command or that the fault is rectified. |

 Copyright © Huawei Technologies Co., Ltd. 

# 3 Inverter Storage

**NOTICE**

- Store devices according to the storage requirements. Device damage caused by unqualified storage conditions is not covered under the warranty.
- Do not store the devices without outer packaging.

The following requirements shall be met if inverters are not put into use immediately:

- Do not remove the outer packaging. Check the packaging regularly (recommended: once every three months). Replace any packaging that is damaged during storage.
- If an inverter is unpacked but will not be used immediately, put it back to the original packaging with the desiccant, and seal it with tape.
- Inverters must be stored in a clean and dry environment with appropriate temperature and humidity. The air must not contain corrosive or flammable gases.

**Figure 3-1** Storage temperature and humidity

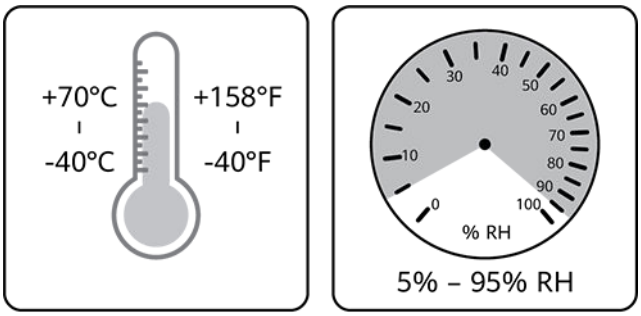


- When temporarily storing inverters outdoors, do not stack them on a pallet. Take rainproof measures such as using tarpaulins to protect inverters from rain and water.
- Do not tilt a packing case or place it upside down.
- To avoid personal injury or device damage, stack inverters with caution to prevent them from falling over.

 Copyright © Huawei Technologies Co., Ltd. 

**Figure 3-2** Maximum number of stacking layers (In the figure, N indicates the maximum number of stacking layers.)

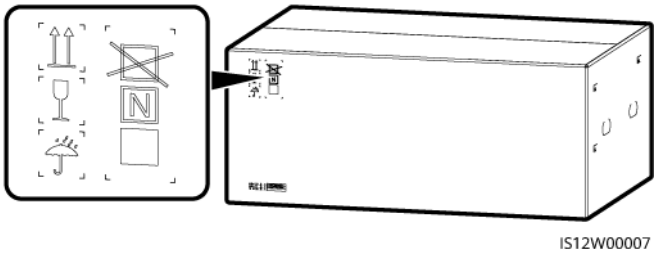


- Do not store inverters for more than two years. If inverters have been stored for two years or longer, they must be checked and tested by professionals before being put into use.
- If an inverter has not been running for six months or longer after being mounted, it may have failed and must be checked and tested by professionals before being put into operation.

# 4 Installation

## 4.1 Checking Before Installation

### Outer Packing Materials

Before unpacking the inverter, check the outer packing materials for damage, such as holes and cracks, and check the inverter model. If any damage is found or the inverter model is not what you requested, do not unpack the package and contact your supplier as soon as possible.

**NOTE**

You are advised to remove the packing materials within 24 hours before installing the inverter.

### Package Contents

**NOTICE**

- After placing the equipment in the installation position, unpack it with care to prevent scratches. Keep the equipment stable during unpacking.

After unpacking the inverter, check that the contents are intact and complete. If any damage is found or any component is missing, contact your supplier.

**NOTE**

For details about the number of contents, see the *Packing List* in the packing case.

 Copyright © Huawei Technologies Co., Ltd. 

# 4.2 Tools

| Type | Tools and Instruments | | |
|---|---|---|---|
| Installation | 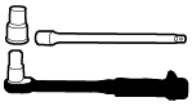 Insulated torque socket wrench (including an extension bar) | Insulated torque socket wrench (including an extension socket) | Phillips insulated torque screwdriver |
| | 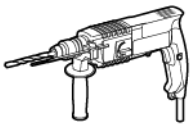 Hammer drill | Hammer drill bit | Rubber mallet |
| | Utility knife | 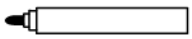 Marker | 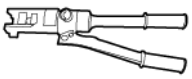 Hydraulic pliers |
| | Cable cutter | 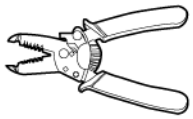 Wire stripper | 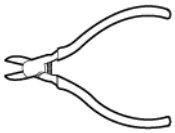 Diagonal pliers |
| | 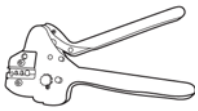 Crimping tool H4TC0003 (Amphenol) | 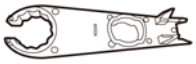 Open-end wrench H4TW0001 (Amphenol) | 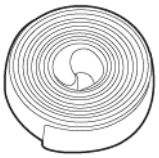 Heat shrink tubing |

 Copyright © Huawei Technologies Co., Ltd. 

| Type | Tools and Instruments | | |
|---|---|---|---|
| | 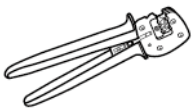 Crimping tool (model: PV-CZM-22100) | Open-end wrench (model: PV-MS-HZ or PV-MS) | Heat gun |
| | 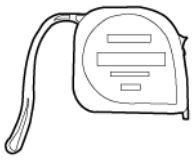 Steel measuring tape | Level | Multimeter |
| | Cable tie | Vacuum cleaner | - |
| Personal protective equipment (PPE) | Goggles | Protective shoes | 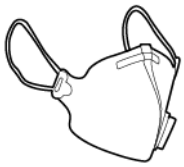 Dust mask |
| | Protective gloves | Insulated gloves | - |

# 4.3 Determining the Installation Position

## Installation Environment Requirements

- Keep the inverter out of reach of children.
- The inverter is protected to IP66 and can be installed indoors or outdoors.

 Copyright © Huawei Technologies Co., Ltd. 

- Do not install the inverter in working or living areas to avoid personal injury or property loss caused by accidental contact by non-professionals or other reasons during device operation.
- Do not install the inverter in noise-sensitive areas (such as residential areas, office areas, and schools) to avoid complaints. If the preceding areas are unavoidable, the distance between the installation position and noise-sensitive areas must be greater than 40 m. Alternatively, use other low-noise models.
- If the device is installed in public places (such as parking lots, stations, and factories) other than working and living areas, install a protective net outside the device and set up a safety warning sign to isolate the device. This is to avoid personal injury or property loss caused by accidental contact by non-professionals or other reasons during device operation.
- If the equipment is installed in a place with abundant vegetation, in addition to routine weeding, harden the ground underneath the equipment using cement or gravel (the area shall be greater than or equal to 3 m x 2.5 m).
- Do not install the equipment in an area with strong vibration, noise, or electromagnetic interference. The equipment shall be installed in an environment with a magnetic field strength less than 4 Gauss. If the magnetic field strength is greater than or equal to 4 Gauss, the equipment may fail to work properly. If the magnetic field strength is high, for example, in a smeltery, you are advised to use a gauss meter to measure the magnetic field strength of the equipment installation position when the smelting equipment is running normally.
- Do not install the inverter in areas containing flammable materials (such as sulfur, phosphorus, liquefied petroleum gas, marsh gas, flour, and cotton) to avoid personal injury or property loss caused by fire or other reasons.
- Do not install the inverter in areas containing explosives (such as blasting agents, display shells, fireworks, and firecrackers) to avoid personal injury or property loss caused by explosion or other reasons.
- Do not install the inverter in areas with corrosive substances (such as sulfuric acid, hydrochloric acid, nitric acid, hydrogen sulfide, and chlorine) to avoid inverter failure caused by corrosion, which is not covered under the warranty.
- Do not install the inverter where its enclosure and heat sink are easily accessible, because the voltage is high and these parts are hot during operation.
- The inverter provides self-protection in high-temperature environments. Its energy yield may decrease as the ambient temperature increases. Ensure that the following installation requirements are met:
  - Install the inverter in a well-ventilated environment to ensure good heat dissipation.
  - If the inverter is installed in an enclosed environment, the heat dissipation equipment or ventilation equipment shall be installed. The indoor ambient temperature must not be higher than the outdoor ambient temperature.
  - You are advised to install the device in a sheltered place or install an awning over it to avoid direct sunlight.
  - Reserve sufficient clearance around the inverter for installation and heat dissipation.

 Copyright © Huawei Technologies Co., Ltd. 

- The inverter will become corroded if installed in areas exposed to salt. Before installing the inverter outdoors in such areas, consult with the Company. A salt-affected area refers to the region within 500 m of the coast or prone to sea breeze. Regions prone to sea breeze vary with weather conditions (such as typhoons and monsoons) or terrains (such as dams and hills).

**NOTE**

The inverter shall be physically separated from residential environments or radio receivers by distance greater than 30 m.

**CAUTION**

The SUN2000-20KTL-BRM3, SUN2000-30KTL-BRM3, and SUN2000-40KTL-BRM3 shall be installed in compliance with the technical standards for PV electrical installation (NBR 16690) and the technical standards for PV system fire risk management (IEC 63226).

## Mounting Structure Requirements

- The mounting structure for the inverter must be fireproof. Do not install the inverter on flammable building materials to avoid personal injury or property loss caused by fire or other reasons.
- Ensure that the installation surface is solid enough to bear the weight of the inverter to avoid personal injury or property loss caused by the collapse of the mounting structure or other reasons.
- In residential areas, do not install the inverter on plaster board walls or walls made of similar materials with a weak sound insulation performance because the noise generated by the inverter may interfere with residents.

## Installation Angle Requirements

The inverter can be wall-mounted or support-mounted. The installation angle requirements are as follows:

- Install the inverter vertically or at a maximum back tilt of 15 degrees to facilitate heat dissipation.
- Do not install the inverter at forward tilted, excessive backward tilted, side tilted, horizontal, or upside down positions.

 Copyright © Huawei Technologies Co., Ltd. 

**Figure 4-1** Installation angle

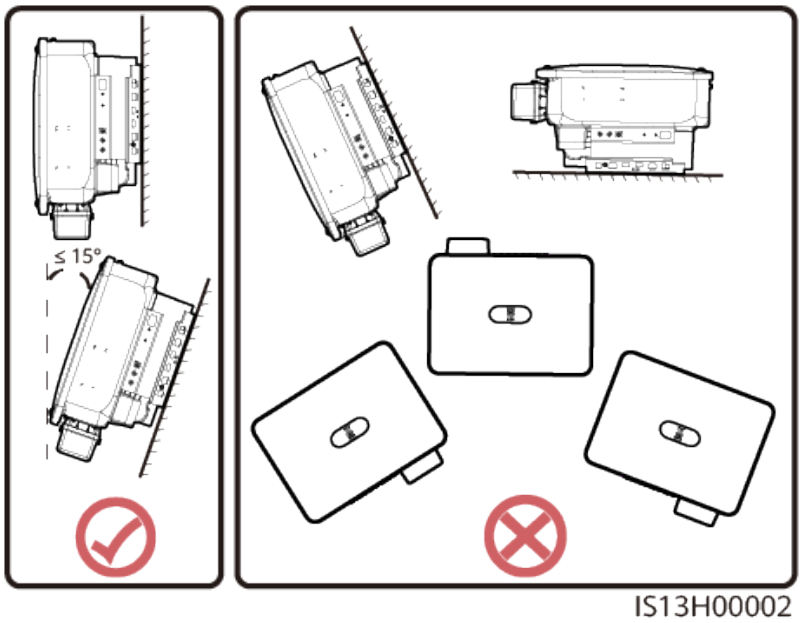


## Installation Clearances

- Reserve enough clearances around the inverter to ensure sufficient space for installation and heat dissipation.

**Figure 4-2** Clearances

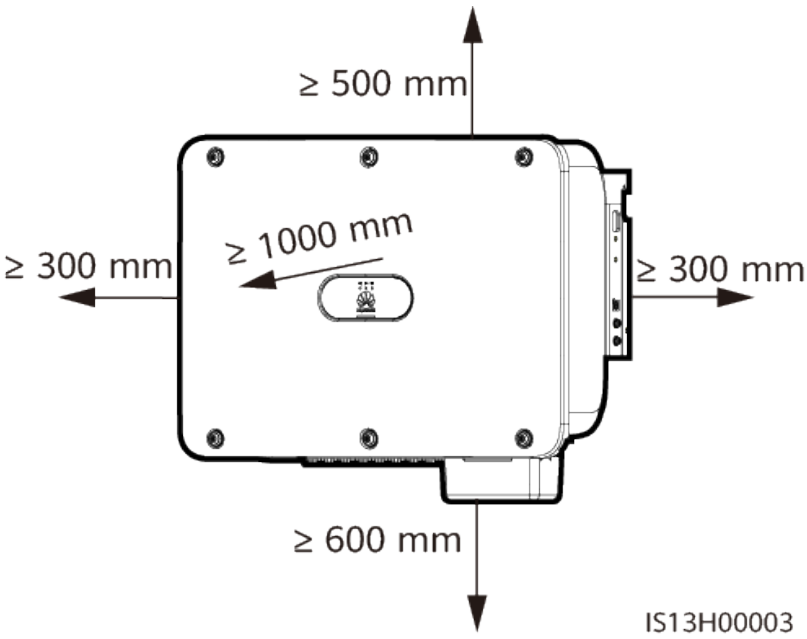


- When installing multiple inverters, install them in horizontal mode if sufficient space is available and install them in triangle mode if no sufficient space is available. Stacked installation is not recommended.

 Copyright © Huawei Technologies Co., Ltd. 

**Figure 4-3** Horizontal installation mode (recommended)

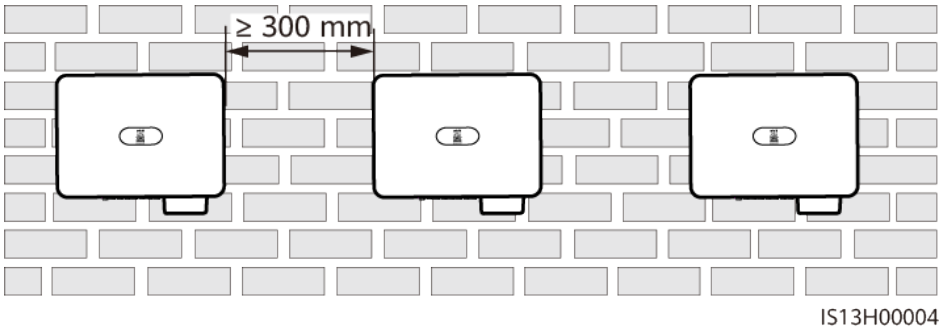


**Figure 4-4** Two-layer triangle installation mode (recommended)

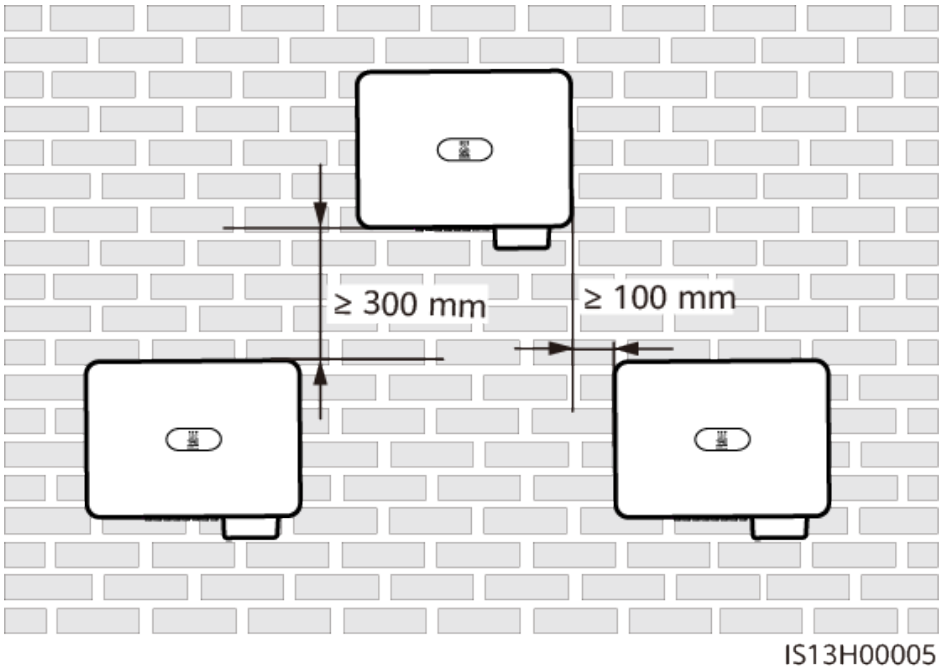


**Figure 4-5** Three-layer triangle installation mode (not recommended)

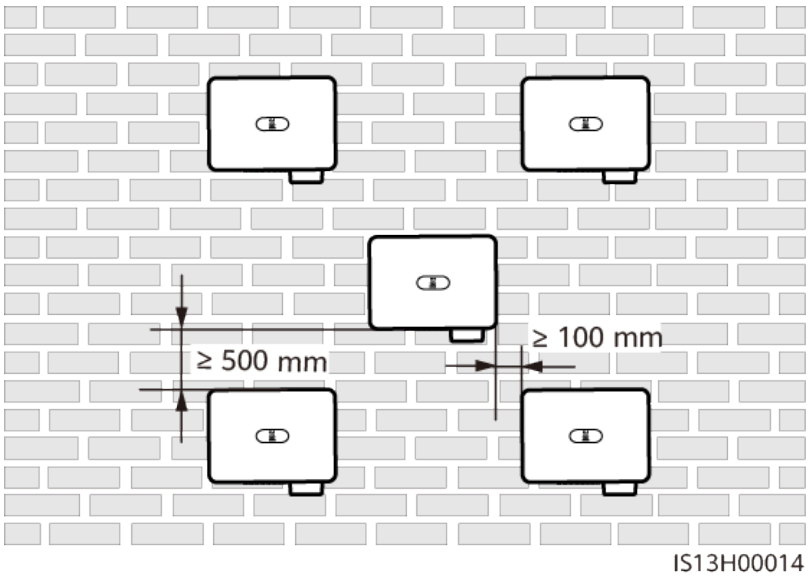

**Figure 4-6** Stacked installation mode (not recommended)

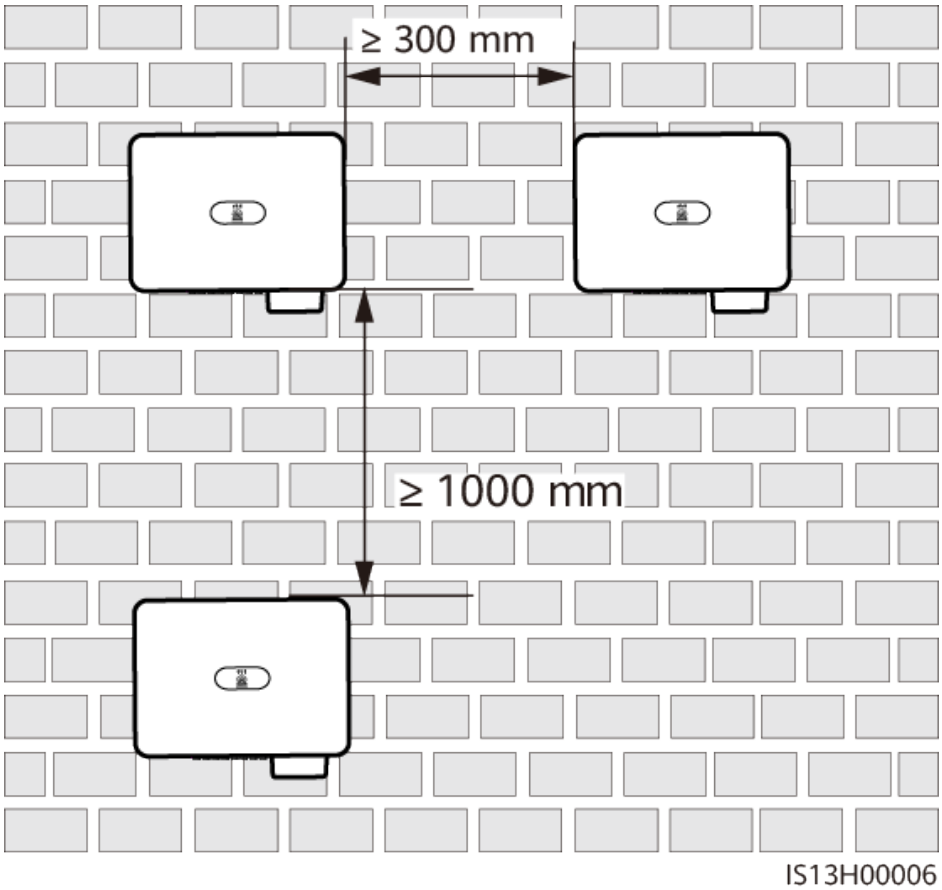


**Figure 4-7** Back-to-back installation mode (not recommended)

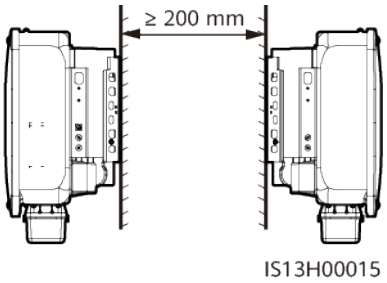


**NOTE**

The installation figures are for reference only and are irrelevant to the inverter cascading scenario.

# 4.4 Moving the Inverter

## Procedure

**Step 1** Lift the inverter out of the packing case and move it to the installation position.

**CAUTION**

- Move the inverter with care to prevent device damage and personal injury.
- Do not use the wiring terminals and ports at the bottom to support any weight of the inverter.
- When you need to temporally place the inverter on the ground, use foam, cardboard, or other protection material to prevent damage to its enclosure.

**Figure 4-8** Moving the inverter

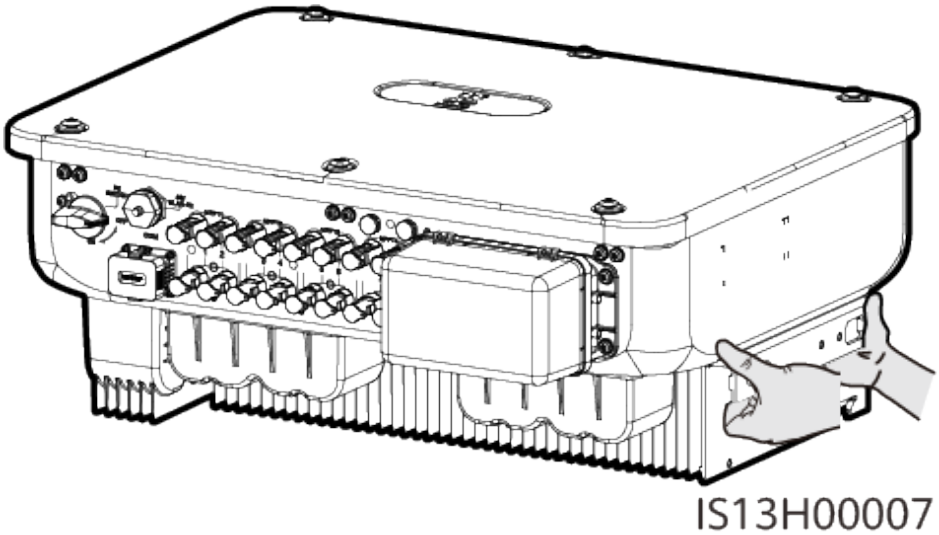


**----End**

# 4.5 Installing the Mounting Bracket

## Installation Precautions

Before installing the mounting bracket, remove the torx key and keep it for later use.

**Figure 4-9** Position for binding the torx key

(1) Torx key

Figure 4-10 shows the dimensions of mounting holes for the inverter.

**Figure 4-10** Mounting bracket dimensions

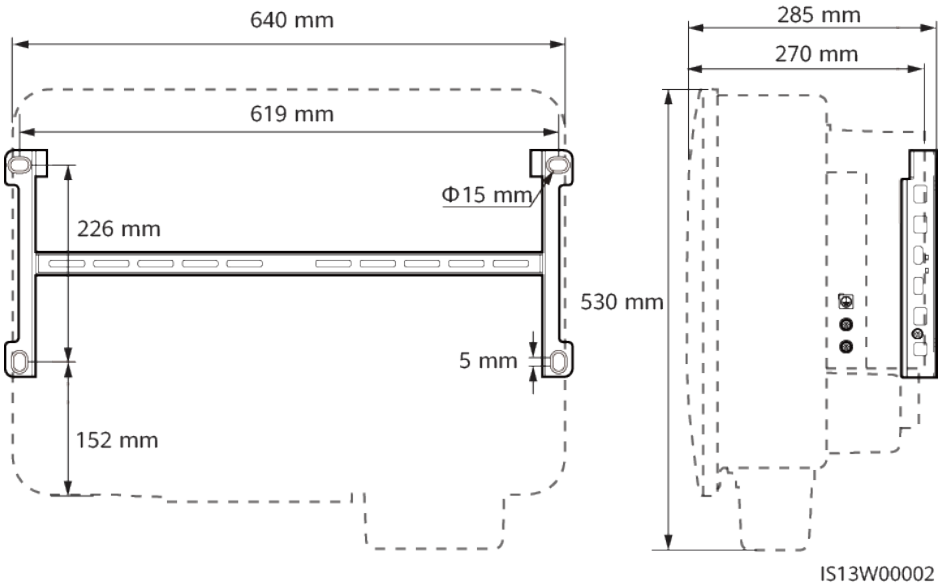


## 4.5.1 Support Mounting

### Procedure

**Step 1** Secure the mounting bracket.

**Figure 4-11** Securing the mounting bracket

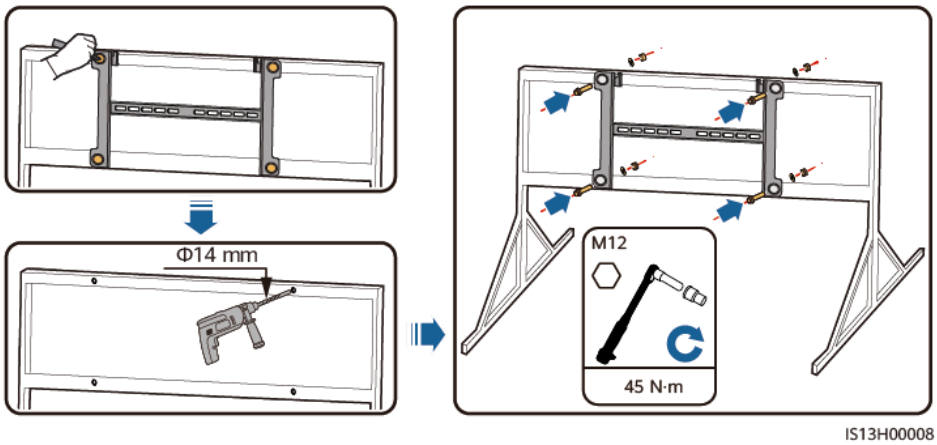


**NOTE**

You are advised to apply anti-rust paint on the hole positions for protection.

**----End**

## 4.5.2 Wall Mounting

### Prerequisites

You have prepared expansion bolts. M12x60 stainless steel expansion bolts are recommended.

### Procedure

**Step 1** Determine the hole positions and mark them using a marker.

**Step 2** Secure the mounting bracket.

**DANGER**

Avoid drilling holes into the water pipes or power cables buried in the wall.

**Figure 4-12** Expansion bolt structure

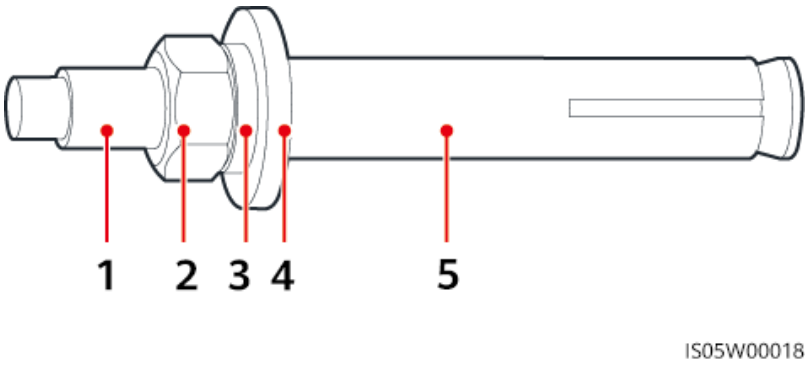


(1) Bolt (2) Nut (3) Spring washer

(4) Flat washer (5) Expansion sleeve

**NOTICE**

- To prevent dust inhalation or contact with eyes, wear safety goggles and a dust mask when drilling holes.
- Use a vacuum cleaner to clean up dust in and around the holes, and measure the spacing. If the holes are inaccurately positioned, drill the holes again in correct positions.
- Level the top of the expansion sleeve with the concrete wall after removing the nut, spring washer, and flat washer. Otherwise, the mounting bracket will not be securely installed on the concrete wall.

 Copyright © Huawei Technologies Co., Ltd. 

**Figure 4-13** Installing an expansion bolt

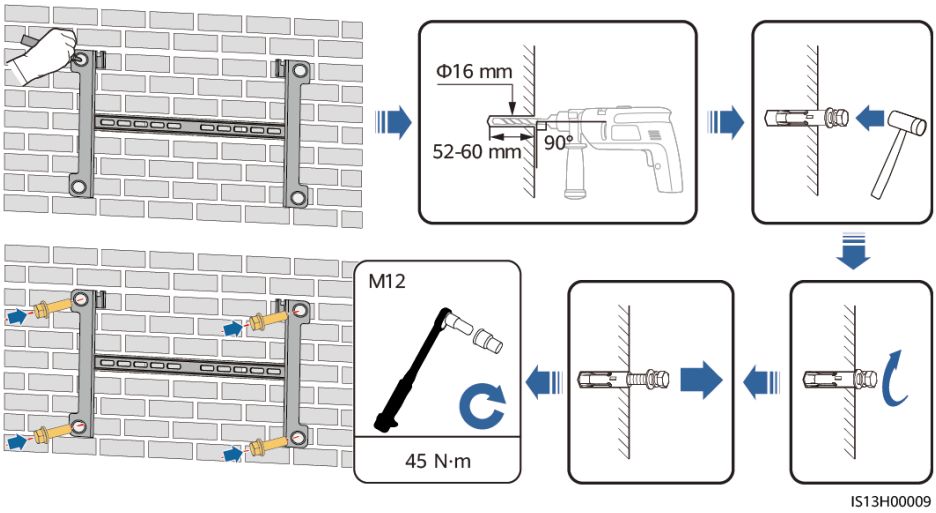


**----End**

# 4.6 Installing the Inverter

**Step 1** (Optional) Install the DC switch locking screw.

NOTE

- The DC switch locking screw is used to lock the DC switch (DC SWITCH) to prevent the inverter from being started by mistake.
- For models used in Australia, install the DC switch locking screw according to local standards. The DC switch locking screw is delivered with the inverter.

**Figure 4-14** Installing the DC switch locking screw

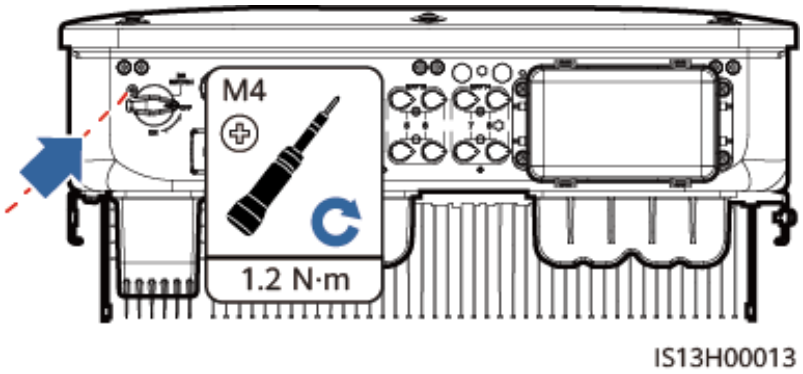


**Step 2** Install the inverter on the mounting bracket.

**Figure 4-15** Installing the inverter

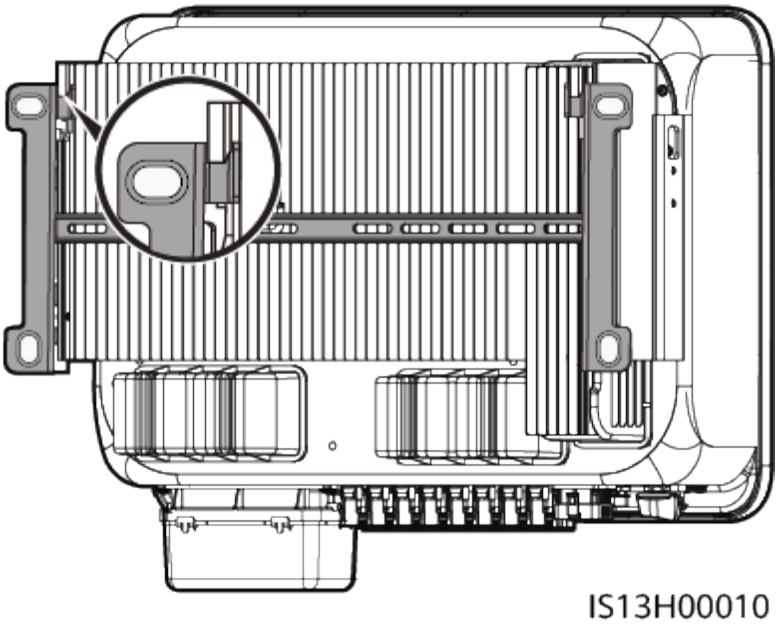


**Step 3** Tighten the screws on both sides of the inverter.

**Figure 4-16** Tightening the screws

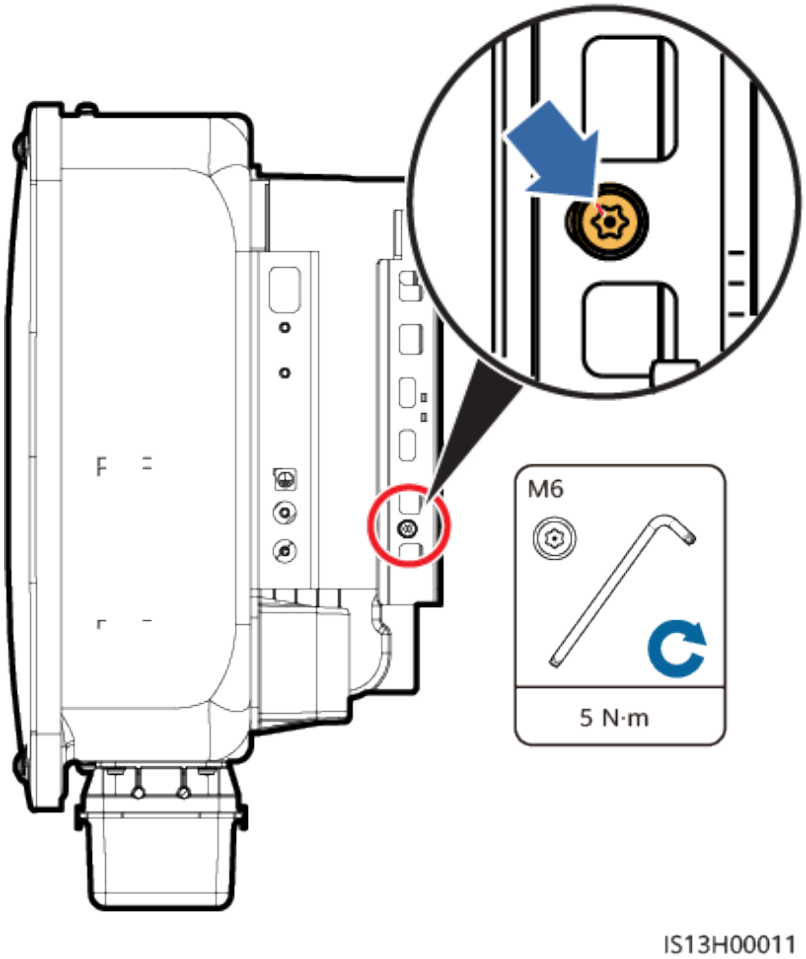

**NOTICE**

Secure the screws on the sides before connecting cables.

**----End**

 Copyright © Huawei Technologies Co., Ltd. 

# 5 Electrical Connections

## 5.1 Precautions

**DANGER**

When exposed to sunlight, the PV arrays supply DC voltage to the inverter. Before connecting cables, ensure that all **DC SWITCH** on the inverter are OFF. Otherwise, the high voltage of the inverter may result in electric shocks.

**DANGER**

- The site must be equipped with qualified fire fighting facilities, such as fire sand and carbon dioxide fire extinguishers.
- Wear personal protective equipment and use dedicated insulated tools to avoid electric shocks or short circuits.

**WARNING**

- The equipment damage caused by incorrect cable connections is beyond the warranty scope.
- Only certified electricians are allowed to connect cables.
- Operation personnel must wear PPE when connecting cables.
- Before connecting cables to ports, leave enough slack to reduce the tension on the cables and prevent poor cable connections.
- Cables must be vertically routed into combiner boxes, PV terminals, and other wiring terminals to avoid damage caused by horizontal stress on the terminals, which is not covered under the warranty.

 Copyright © Huawei Technologies Co., Ltd. 

**CAUTION**

- Stay away from the equipment when preparing cables to prevent cable scraps from entering the equipment. Cable scraps may cause sparks and result in personal injury and equipment damage.

**NOTE**

The cable colors shown in the electrical connection diagrams provided in this section are for reference only. Select cables in accordance with local cable specifications (green-and-yellow cables are only used for protective earthing).

# 5.2 Preparing Cables

**Figure 5-1** SUN2000 cable connections (the components in dashed boxes are optional)

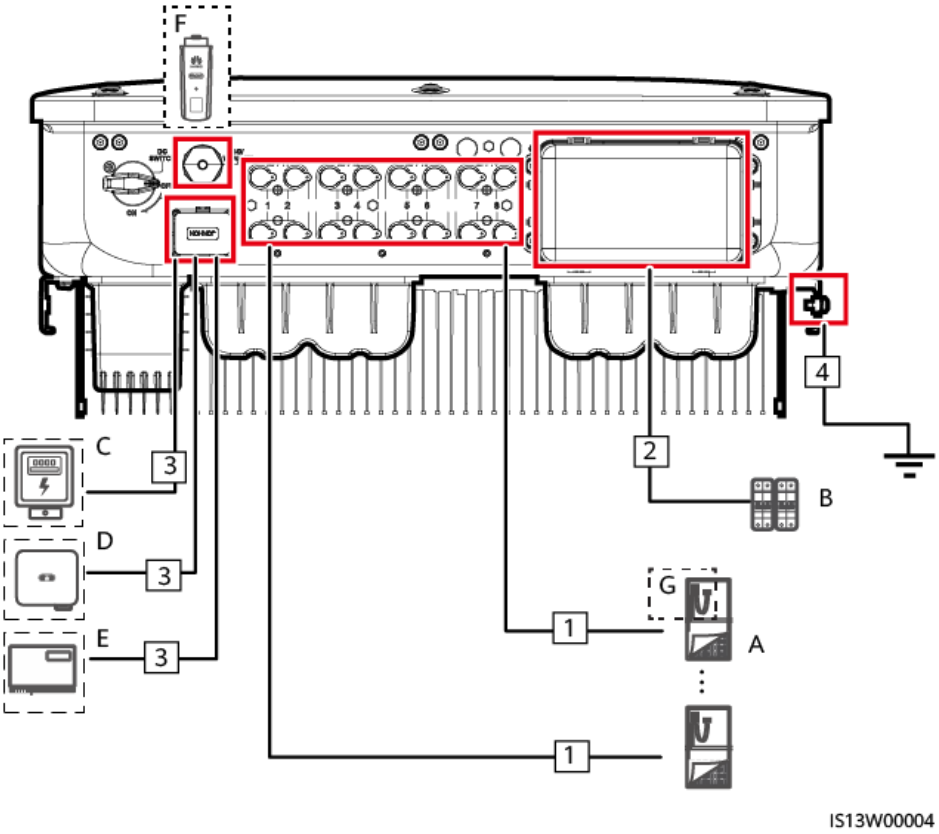



Copyright © Huawei Technologies Co., Ltd.

**Table 5-1** Component description

| No. | Component | Description | Source |
|---|---|---|---|
| A | PV string | ● A PV string consists of PV modules connected in series.<br>● The inverter supports eight PV string inputs. | Prepared by the customer |
| B | AC switch | To ensure that the inverter can be safely disconnected from the power grid when an exception occurs, connect an AC switch to the AC side of the inverter. Select an appropriate AC switch in accordance with local industry standards and regulations. Huawei recommends the following switch specifications:<br>Three-phase AC circuit breaker with a rated voltage greater than or equal to 500 V AC and a rated current of:<br>● 63 A (SUN2000-29.9KTL/30KTL)<br>● 80 A (SUN2000-20KTL)<br>● 100 A (SUN2000-36KTL/40KTL) | Prepared by the customer |
| C | Power meter[1] | Supported meter models: DTSU666-H, DTSU666-HW, YDS60-80, YDS60-C24, DTSU71, DHSU1079-CT, DHSU1079-ZT, and DTSU71C [2] | Purchased from Huawei |
| D | SUN2000 | Select a proper model as required. | Purchased from Huawei |
| E | SmartLogger | SmartLogger3000 | Purchased from Huawei |
| F | Smart Dongle | Select a proper model as required. | Purchased from Huawei |
| G | Smart PV Optimizer[3] | MERC-1300W-P, MERC-1100W-P | Purchased from Huawei |

 Copyright © Huawei Technologies Co., Ltd. 

| No. | Component | Description | Source |
|---|---|---|---|
| Note [1]: For details about how to operate the power meter, see **DTSU666-HW Smart Power Sensor Quick Guide**, **YDS60-80 Smart Power Sensor Quick Guide**, **YDS60-C24 Smart Power Sensor Quick Guide**, **DTSU666-H 100 A and 250 A Smart Power Sensor User Manual**, **DHSU1079-ZT Smart Power Sensor Quick Guide**, or **DTSU71C Smart Power Sensor Quick Guide**.<br>Note [2]: SUN2000MA V100R001C20SPC116 and later versions can connect to DTSU666-HW power meters.<br>Note [3]: For details about optimizer operations, see **MERC Smart PV Optimizer User Manual**. | | | |

**NOTICE**

Cable specifications must meet the requirements in local standards.

**Table 5-2** Cable description

| No. | Cable | Type | Recommended Specifications | Source |
|---|---|---|---|---|
| 1 | DC input power cable | Common outdoor PV cable in the industry<br>(Recommended model: PV1-F) | • Conductor cross-sectional area: 4–6 $mm^2$<br>• Cable outer diameter: 5.5–9 mm | Prepared by the customer |
| 2 | AC output power cable | Outdoor copper-core/aluminum-core cable | • Conductor cross-sectional area: 16–50 $mm^2$ outdoor copper-core cable/35–50 $mm^2$ outdoor aluminum-core cable[a]<br>• Cable outer diameter: 16–38 mm | Prepared by the customer |
| 3 | (Optional) Signal cable | Outdoor shielded twisted pair (recommended model: DJYP2VP2-2x2x0.75) | • Conductor cross-sectional area: 0.2–1 $mm^2$<br>• Cable outer diameter: 4–11 mm | Prepared by the customer |

 Copyright © Huawei Technologies Co., Ltd. 

| No. | Cable | Type | Recommended Specifications | Source |
|---|---|---|---|---|
| 4 | PE cable | Outdoor single-core copper cable | Conductor cross-sectional area: ≥ 16 $mm^2$ | Prepared by the customer |
| Note a: Five-core cables with a cross-sectional area of 5 x 35 $mm^2$ or 5 x 50 $mm^2$ are not supported. | | | | |

**NOTICE**

If the inverter is used with an optimizer, route AC and DC power cables separately to prevent AC power cables from interfering with optimizer communication.

# 5.3 Connecting the PE Cable

**DANGER**

- Ensure that the PE cable is securely connected. Otherwise, electric shocks may occur.
- Do not connect the neutral wire to the enclosure as a PE cable. Otherwise, electric shocks may occur.

**NOTE**

- The PE point at the AC output port is used only as a PE equipotential bonding point, and cannot substitute for the PE point on the enclosure.
- It is recommended that silicone grease or paint be applied around the ground terminal after the PE cable is connected.
- You can enable or disable phase-to-ground short-circuit protection on the app (choose **Settings > Feature parameters > Phase-to-ground short-circuit protection**) to address the situation in which a phase wire is short-circuited to PE. If this function is disabled, the inverter detects the alarm and can connect to the power grid and generate power normally.

## Procedure

**Step 1** Crimp an OT terminal.

 Copyright © Huawei Technologies Co., Ltd. 

**NOTICE**

- Avoid scratching the core wire when stripping a cable.
- The cavity formed after the conductor crimp strip of the OT terminal is crimped must wrap the core wire completely. The core wire must make close contact with the OT terminal.
- Wrap the wire crimping area with heat shrink tubing or insulation tape. The heat shrink tubing is used as an example.
- Use a heat gun carefully to avoid heat damage to the equipment.

**Figure 5-2** Crimping an OT terminal

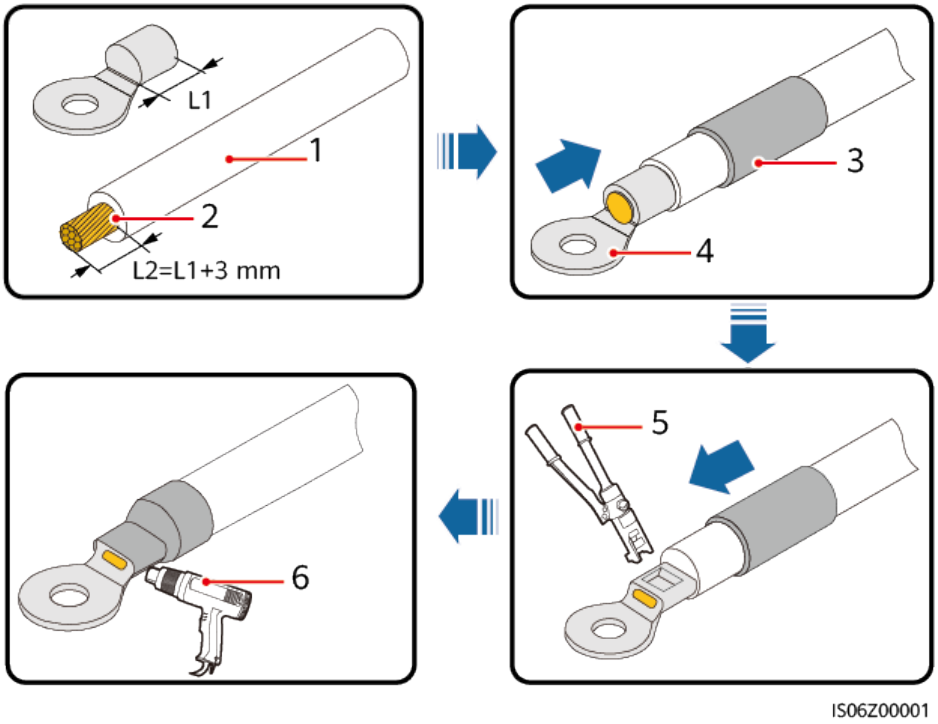


| | | |
|---|---|---|
| (1) Cable | (2) Core wire | (3) Heat shrink tubing |
| (4) OT terminal | (5) Crimping tool | (6) Heat gun |

**Step 2** Connect the PE cable.

 Copyright © Huawei Technologies Co., Ltd. 

**Figure 5-3** Connecting the PE cable

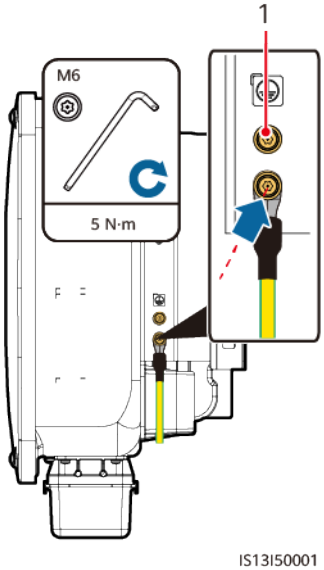


(1) Standby PE point

**----End**

# 5.4 Connecting an AC Output Power Cable

## Precautions

An AC switch must be installed on the AC side of the inverter to ensure that the inverter can be safely disconnected from the power grid.

**WARNING**

- Do not connect loads between an inverter and an AC switch that directly connects to the inverter. Otherwise, the switch may trip by mistake.
- If an AC switch is used with specifications beyond local standards, regulations, or the Company's recommendations, the switch may fail to turn off in a timely manner in case of exceptions, causing serious faults.

**CAUTION**

Each inverter shall be equipped with an AC output switch. Multiple inverters shall not connect to the same AC switch.

Cables must be vertically routed into the maintenance compartment, PV terminals, and other wiring terminals to avoid damage caused by horizontal stress on the terminals, which is not covered under the warranty.

 Copyright © Huawei Technologies Co., Ltd. 

**NOTICE**

- If the external AC switch provides the leakage protection function, the rated residual operating current must be greater than or equal to 300 mA.
- If multiple inverters are connected to the master leakage protection device through their external AC switches, the rated residual operating current of the device must be greater than or equal to the number of inverters x 300 mA.
- Use a socket wrench and extension rod to connect the AC power cable. The extension rod must be longer than 100 mm.
- Reserve sufficient slack for the PE wire to ensure that the PE wire is the last cable bearing the force when the AC output power cable is subject to a pulling force due to force majeure.
- Do not install third-party devices in the AC connection box.
- You need to prepare M8 OT terminals by yourself.
- If the AC MBUS is used, multi-core cables are recommended, supporting a maximum communication distance of 1000 m. To use other types of AC power cables, contact the Company's technical support.

## Requirements for the OT or DT Terminal

- If a copper cable is used, use copper wiring terminals.
- If a copper-clad aluminum cable is used, use copper wiring terminals.
- If an aluminum alloy cable is used, use copper-aluminum transition wiring terminals, or aluminum wiring terminals along with copper-aluminum transition spacers.

**NOTICE**

- Do not connect aluminum wiring terminals to the AC terminal block. Otherwise the electrochemical corrosion will occur and affect the reliability of cable connections.
- Comply with the IEC61238-1 requirements when using copper-aluminum transition wiring terminals, or aluminum wiring terminals along with copper-aluminum transition spacers.
- If copper-aluminum transition spacers are used, pay attention to the front and rear sides. Ensure that the aluminum sides of spacers are in contact with aluminum wiring terminals, and copper sides of spacers are in contact with the AC terminal block.

 Copyright © Huawei Technologies Co., Ltd. 

**Figure 5-4** Requirements for the OT/DT terminal

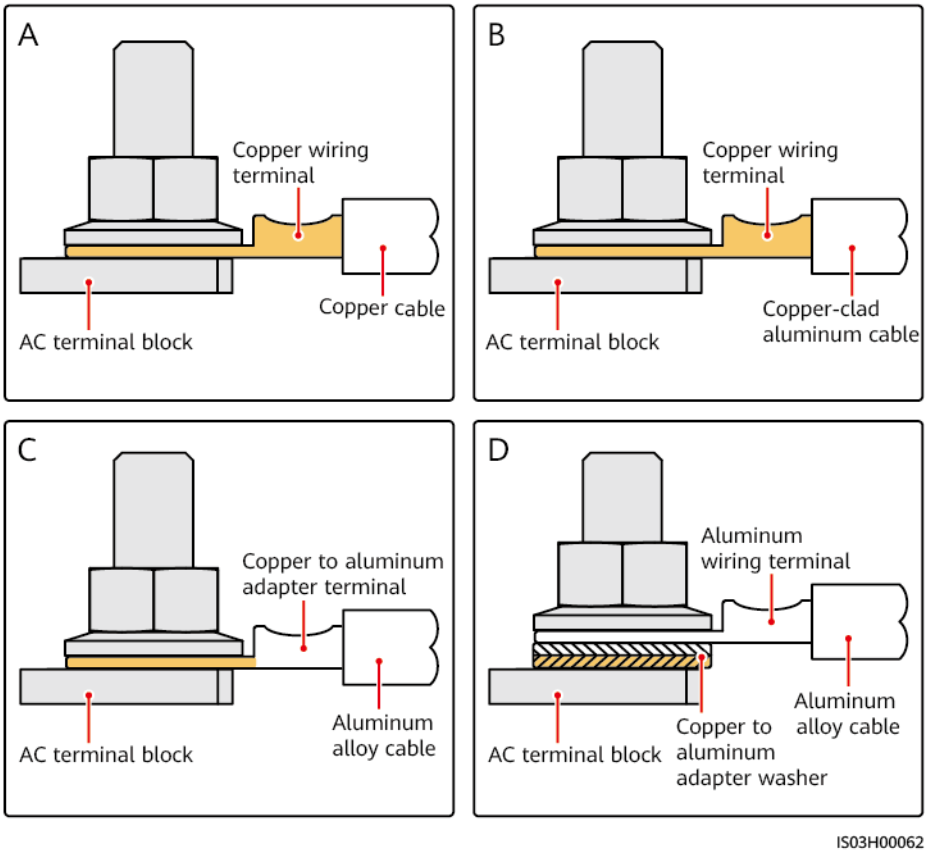


## Procedure

**Step 1** Remove the AC terminal box and install partition boards.

**Figure 5-5** Removing the AC terminal box

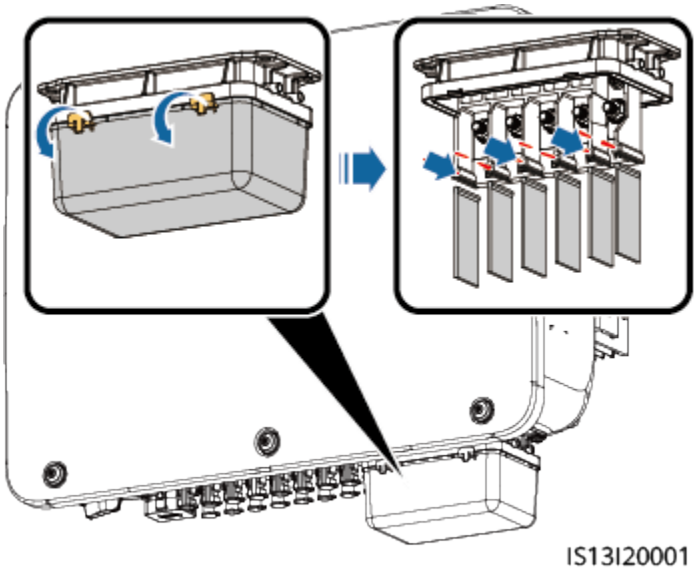


**Step 2** Connect the AC output power cable.

NOTE

- Do not route a cable with a crimped OT terminal directly through the rubber liner. Otherwise, the liner may be damaged.
- Reserve sufficient slack for the PE wire to ensure that the PE wire is the last cable bearing the force when the AC output power cable is subject to a pulling force due to force majeure. It is recommended that the stripping length of the PE cable be 15 mm longer than that of other cables.
- The cable colors shown in the figures are for reference only. Select an appropriate cable according to the local standards.

**Figure 5-6** Stripping an AC power cable (using a five-core cable as an example)

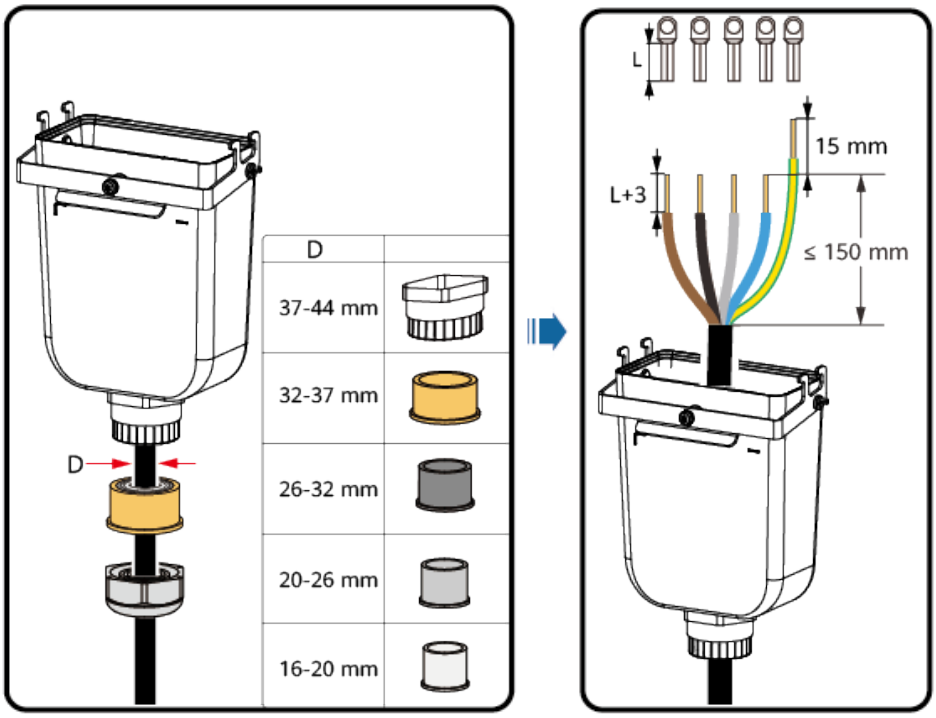


**Figure 5-7** Five-core cable (L1, L2, L3, N, and PE)

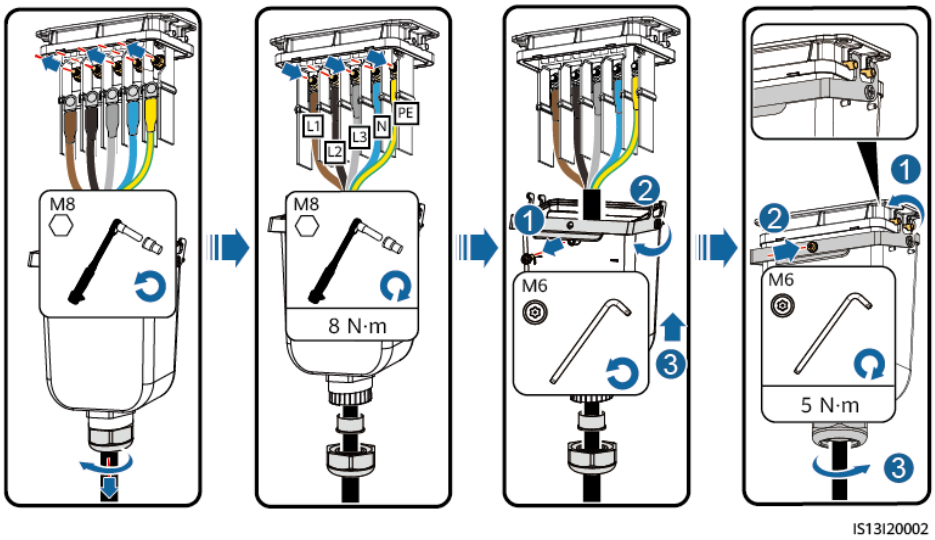

**Figure 5-8** Four-core cable (L1, L2, L3, and PE)

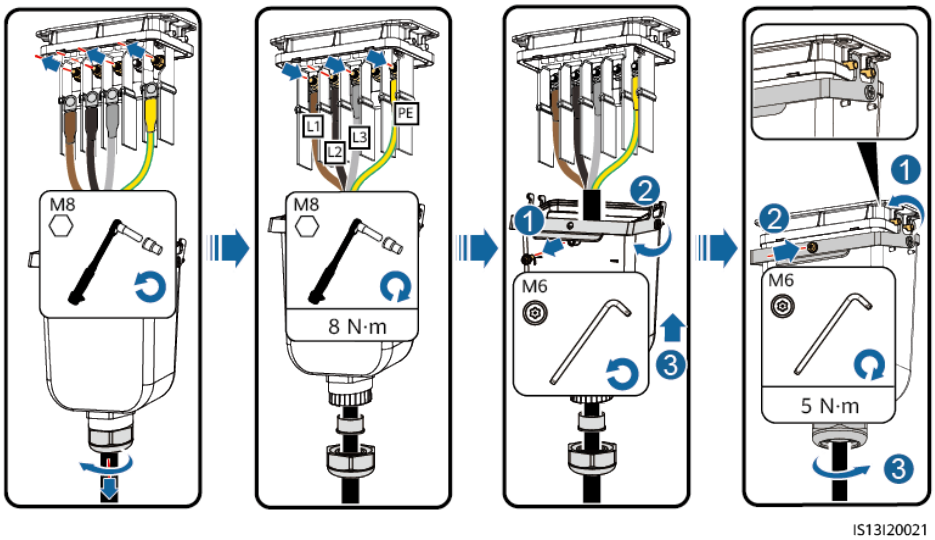


**Figure 5-9** Four-core cable (L1, L2, L3, and N)

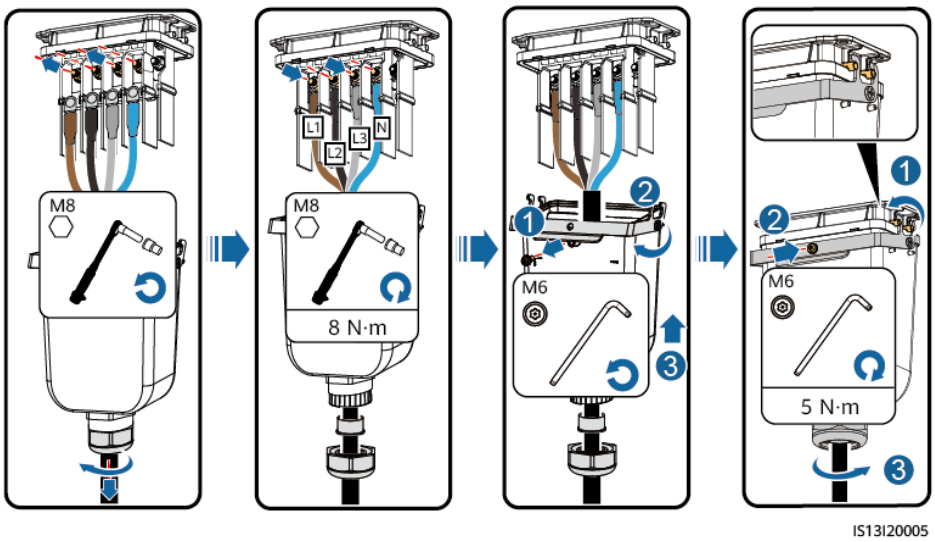



Copyright © Huawei Technologies Co., Ltd.

**Figure 5-10** Three-core cable (L1, L2, and L3)

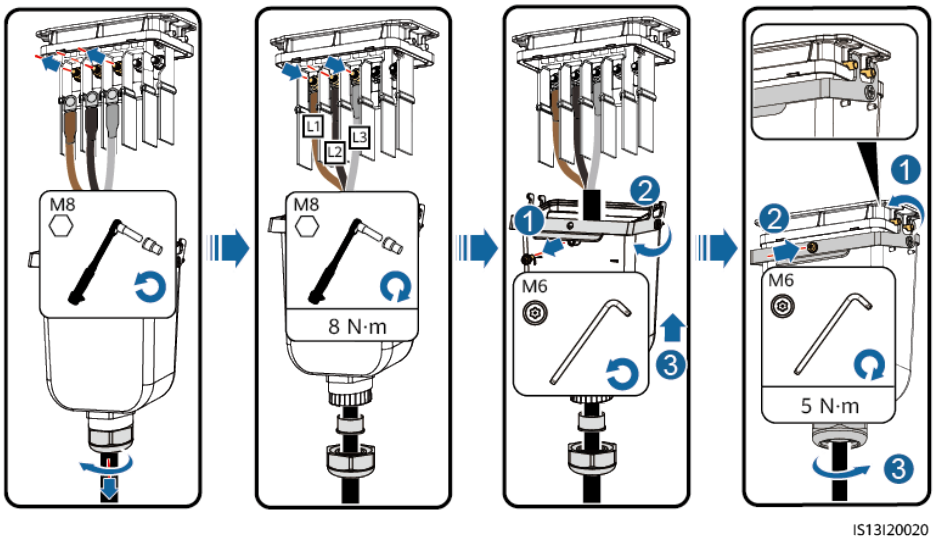


**Figure 5-11** Wiring requirements

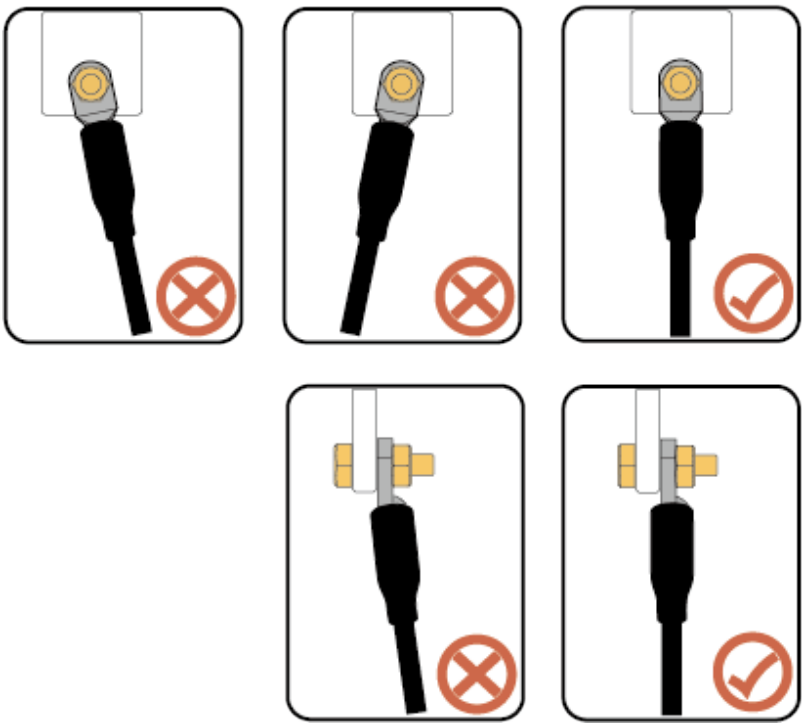

**----End**


Copyright © Huawei Technologies Co., Ltd.

# 5.5 Connecting DC Input Power Cables

**CAUTION**

- There are two models of PV connectors delivered with the device: Amphenol Helios H4 and Staubli MC4. PV connectors of different models cannot be used together. Device damage caused by mixed use of different PV connectors is not covered by the warranty.
- Take waterproof and insulation measures for unused DC power cables to avoid personal injury or property loss caused by accidental contact with high voltage or other reasons.

## 5.5.1 Cable Connection Description

### Precautions

**DANGER**

- Before connecting the DC input power cables, ensure that the DC voltage is within the safe range (lower than 60 V DC) and that the DC switch on the inverter is OFF. Failing to do so may result in electric shocks.
- When the inverter is running, it is not allowed to work on the DC input power cables, such as connecting or disconnecting a PV string or a PV module in a PV string. Failing to do so may cause electric shocks.
- If no PV string connects to a DC input terminal of the inverter, do not remove the watertight cap from the DC input terminals. Otherwise, the IP rating of the inverter will be affected.


Copyright © Huawei Technologies Co., Ltd.

**WARNING**

Ensure that the following conditions are met. Otherwise, the inverter may be damaged or even a fire may occur.

- PV modules connected in series in each PV string are of the same specifications.
- The DC input voltage of the SUN2000-29.9KTL/30KTL/36KTL/40KTL-M3 shall not exceed 1100 V DC under any conditions.
- The DC input voltage of the SUN2000-20KTL-M3 shall not exceed 800 V DC under any conditions.
- The polarities of electrical connections must be correct on the DC input side. The positive and negative terminals of a PV string must be connected to corresponding positive and negative DC input terminals of the inverter.
- If a DC input power cable is reversely connected, do not immediately operate on the **DC SWITCH** or positive and negative connectors. Wait until the night when solar irradiance declines and the PV string current drops to below 0.5 A. Then set the **DC SWITCH** to **OFF**, remove the positive and negative connectors, and correct the polarities of the DC input power cable.

**WARNING**

During the installation of PV strings and the inverter, the positive or negative terminals of PV strings may be short-circuited to ground if the power cables are not properly installed or routed. In this case, an AC or DC short circuit may occur and damage the inverter. The resulting device damage is not covered under any warranty.

**NOTICE**

- The inverter does not support power supplies other than PV strings. The output of the PV string connected to the inverter cannot be grounded. Ensure that the PV module output is well insulated to ground.
- To ensure the optimal power generation of the system, the voltage difference between different MPPT circuits shall be less than 85 V.

**Figure 5-12** DC input terminals

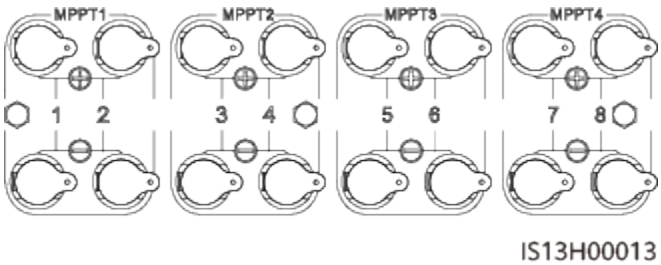


If the DC input terminals are not fully configured with PV strings, the DC input terminals must meet the following requirements:


Copyright © Huawei Technologies Co., Ltd.

1. Evenly distribute the DC input power cables on the four MPPTs and preferentially connect them from MPPT 1 to MPPT 4.
2. Maximize the number of connected MPPT circuits.

| Quantity of PV Strings | Terminal Selection | Quantity of PV Strings | Terminal Selection |
|---|---|---|---|
| 1 | PV1 | 2 | PV1, PV7 |
| 3 | PV1, PV3, PV7 | 4 | PV1, PV3, PV5, PV7 |
| 5 | PV1, PV2, PV3, PV5, PV7 | 6 | PV1, PV2, PV3, PV5, PV7, PV8 |
| 7 | PV1, PV2, PV3, PV4, PV5, PV7, PV8 | 8 | PV1, PV2, PV3, PV4, PV5, PV6, PV7, PV8 |

## 5.5.2 Connecting Cables to Amphenol Helios H4 Terminals

**CAUTION**

Use the Amphenol Helios H4 positive and negative metal terminals and DC connectors delivered with the inverter. Using incompatible positive and negative metal terminals and DC connectors may result in serious consequences. The resulting device damage is not covered by the product warranty.

**NOTICE**

- You are advised to use the H4TC0003 (Amphenol) crimping tool and do not use it with the positioning block. Otherwise, the metal terminals may be damaged.
- The H4TW0001 (Amphenol) open-end wrench is recommended.
- Cables with high rigidity, such as armored cables, are not recommended as DC input power cables, because poor contact may be caused by the bending of the cables.
- Before assembling DC connectors, label the cable polarities correctly to ensure correct cable connections.
- After the positive and negative connectors snap into place, try to pull the DC input power cables back to check that they are secure.
- If the inverter is used with optimizers, the number of optimizers in a single PV string cannot exceed 25.
- If PV strings are configured with optimizers, check the cable polarities by referring to the *Smart PV Optimizer Quick Guide*.

 Copyright © Huawei Technologies Co., Ltd. 

## Procedure

**Step 1** Connect DC power cables.

**Figure 5-13** Connecting DC power cables

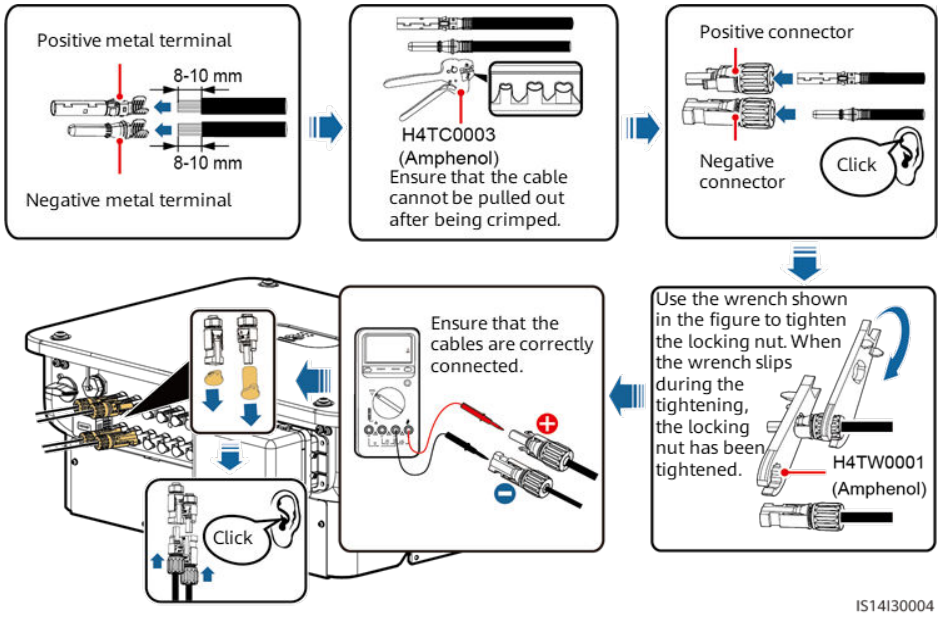


**----End**

**NOTICE**

During DC input power cabling, leave at least 50 mm of slack. The axial tension on PV connectors must not exceed 80 N. Radial stress or torque must not be generated on PV connectors.

## 5.5.3 Connecting Cables to Staubli MC4 Terminals

**⚠ CAUTION**

Use the Staubli MC4 positive and negative metal terminals and DC connectors delivered with the inverter. Using incompatible positive and negative metal terminals and DC connectors may result in serious consequences. The resulting device damage is not covered by the product warranty.

 Copyright © Huawei Technologies Co., Ltd. 

**NOTICE**

- You are advised to use the PV-CZM-22100 (Staubli) crimping tool and do not use it with the positioning block. Otherwise, the metal terminals may be damaged.
- The PV-MS (Staubli) or PV-MS-HZ (Staubli) open-end wrench is recommended.
- Cables with high rigidity, such as armored cables, are not recommended as DC input power cables, because poor contact may be caused by the bending of the cables.
- Before assembling DC connectors, label the cable polarities correctly to ensure correct cable connections.
- After the positive and negative connectors snap into place, try to pull the DC input power cables back to check that they are secure.
- If the inverter is used with optimizers, the number of optimizers in a single PV string cannot exceed 25.
- If PV strings are configured with optimizers, check the cable polarities by referring to the *Smart PV Optimizer Quick Guide*.

## Procedure

**Step 1** Connect DC power cables.

**Figure 5-14** Connecting DC power cables

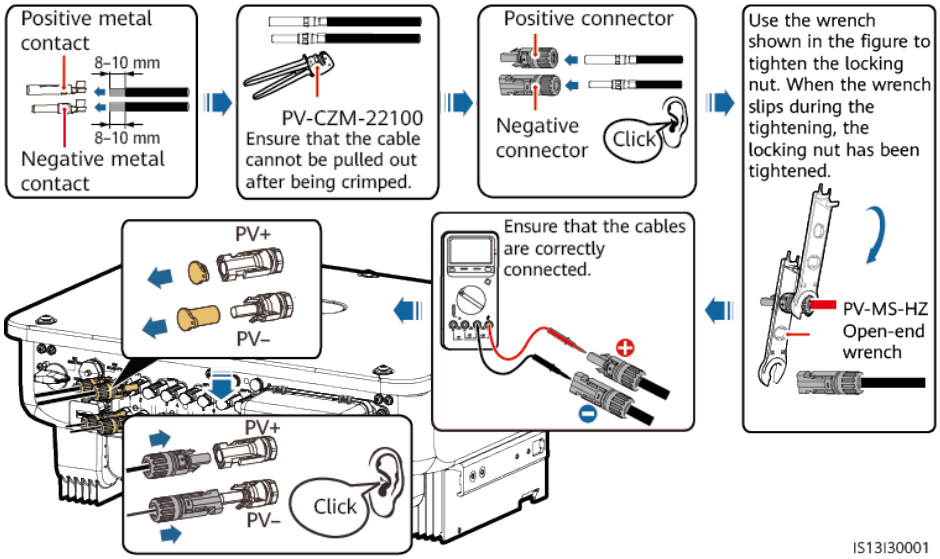


**----End**

**NOTICE**

During DC input power cabling, leave at least 50 mm of slack. The axial tension on PV connectors must not exceed 80 N. Radial stress or torque must not be generated on PV connectors.

 Copyright © Huawei Technologies Co., Ltd. 

# 5.6 (Optional) Installing the Smart Dongle

## Procedure

NOTE

The Smart Dongle is not provided in standard configuration.

- 4G Smart Dongle

NOTICE

- If your Smart Dongle is not equipped with a SIM card, prepare a standard SIM card by yourself (size: 25 mm x 15 mm) with the capacity greater than or equal to 64 KB.
- When installing the SIM card, determine its installation direction based on the silk screen and arrow on the card slot.
- Press the SIM card in place to lock it, indicating that the SIM card is correctly installed.
- When removing the SIM card, push it inward to eject it.
- When reinstalling the enclosure of the Smart Dongle, ensure that the snap-fits click into place.

**Figure 5-15** Installing the 4G Smart Dongle (SDongleA-03)

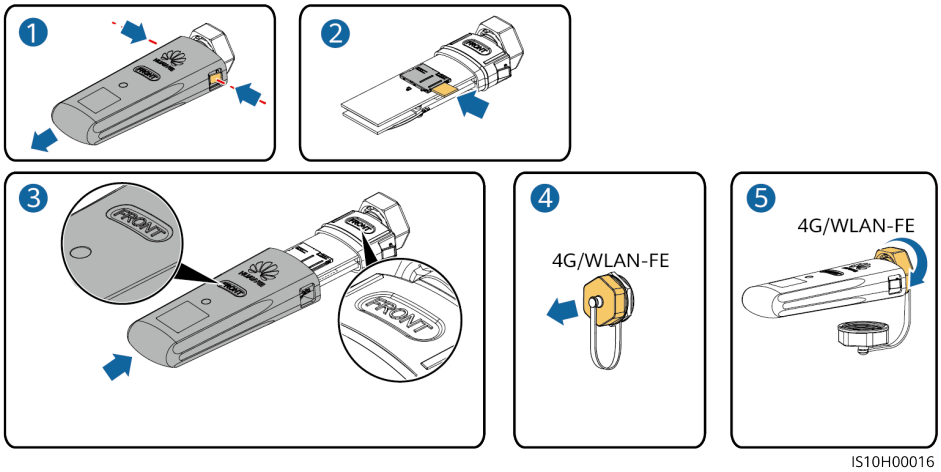



Copyright © Huawei Technologies Co., Ltd.

**Figure 5-16** Installing the 4G Smart Dongle (SDongleB-06)

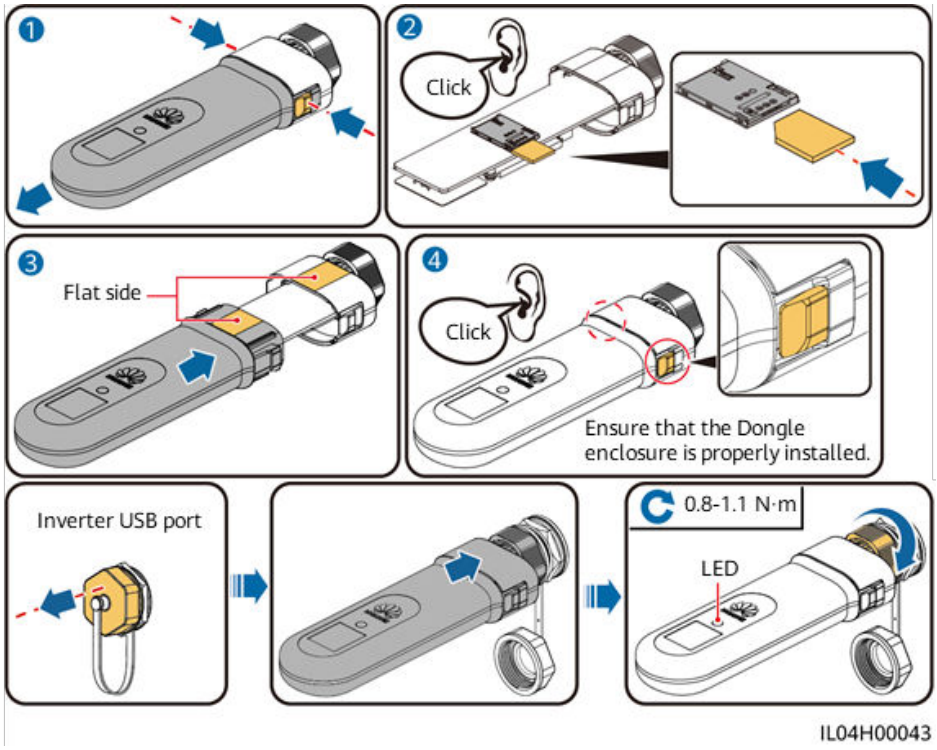


- WLAN-FE Smart Dongle (WLAN communication)

**Figure 5-17** Installing the WLAN-FE Smart Dongle (WLAN communication)

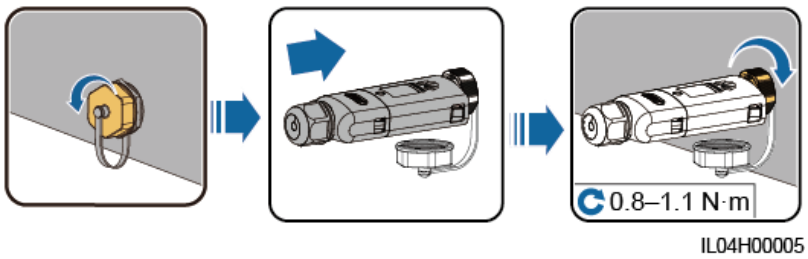


- WLAN-FE Smart Dongle (FE communication)

**Figure 5-18** Installing the WLAN-FE Smart Dongle (FE communication)

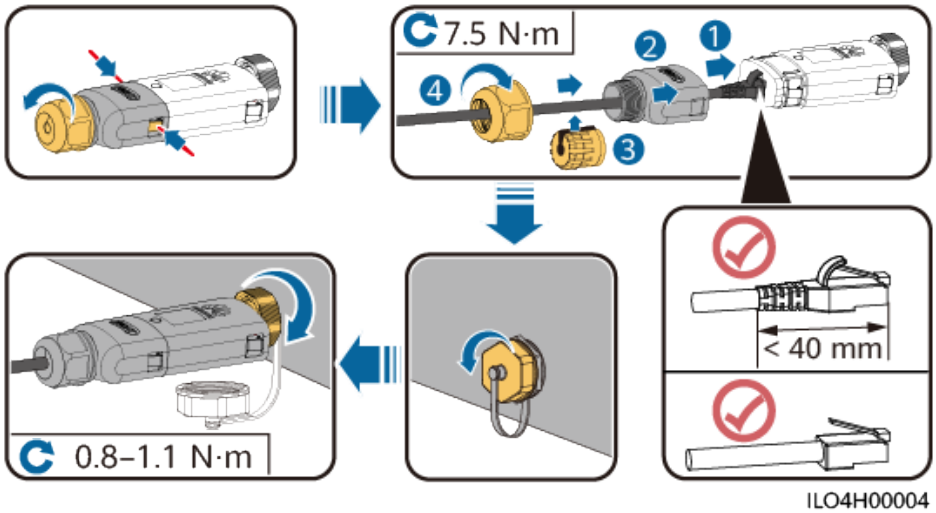


**NOTICE**

Install the network cable before installing the Smart Dongle on the inverter.

**NOTE**

- For details about how to use the WLAN-FE Smart Dongle SDongleA-05, see **SDongleA-05 Smart Dongle Quick Guide (WLAN-FE)**. You can scan the QR code below to obtain the document.
- For details about how to use the 4G Smart Dongle SDongleA-03, see **SDongleA-03 Quick Guide (4G)**. You can scan the QR code below to obtain the document.
- For details about how to use the 4G Smart Dongle SDongleB-06, see **SDongleB-06 Smart Dongle Quick Guide (4G)**. You can scan the QR code below to obtain the document.

The quick guide is delivered with the Smart Dongle.

 Copyright © Huawei Technologies Co., Ltd. 

# 5.7 Connecting Signal Cables

## COM Port Pin Definitions

**NOTICE**

When laying out signal cables, separate them from power cables and keep them away from strong interference sources to prevent communication interruption.

**Figure 5-19** Pin definitions

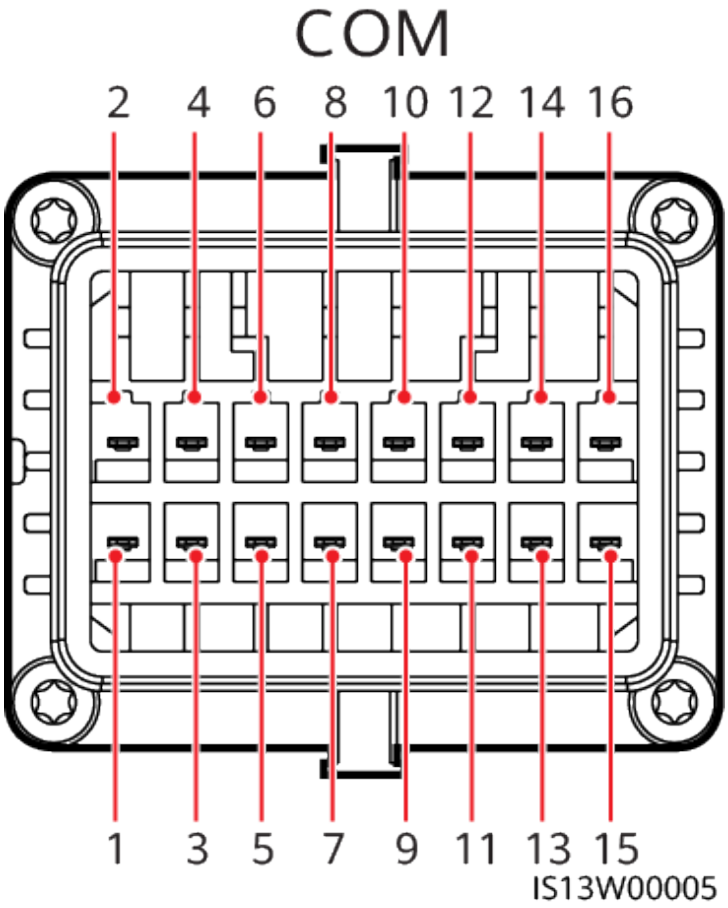



Copyright © Huawei Technologies Co., Ltd.

| Pin | Definition | Function | Description | Pin | Definition | Function | Description |
|---|---|---|---|---|---|---|---|
| 1 | 485A1_1 | RS485 differential signal + | For inverter cascading or connecting to the RS485 signal port of a SmartLogger | 2 | 485A1_2 | RS485 differential signal + | For inverter cascading or connecting to the RS485 signal port of a SmartLogger |
| 3 | 485B1_1 | RS485 differential signal – | | 4 | 485B1_2 | RS485 differential signal – | |
| 5 | PE | Shield layer grounding | - | 6 | PE | Shield layer grounding | - |
| 7 | 485A2 | RS485 differential signal + | For connecting to the RS485 signal port for controlling the power meter at the grid connection point. | 8 | DIN1 | Dry contact for grid scheduling | - |
| 9 | 485B2 | RS485 differential signal – | | 10 | DIN2 | | |
| 11 | - | - | - | 12 | DIN3 | | |
| 13 | GND | GND | - | 14 | DIN4 | | |
| 15 | DIN5 | Rapid shutdown/NS protection | For the rapid shutdown DI signal or connecting to the signal cable of an NS protection device | 16 | GND | | |

## Scenario Where No Signal Cable Is Connected

**NOTICE**

If no signal cable is connected to the inverter, use a waterproof plug to seal the cable hole of the signal cable connector and connect the signal cable connector to the communications port on the inverter for better waterproof performance.


Copyright © Huawei Technologies Co., Ltd.

**Figure 5-20** Connecting the signal cable connector

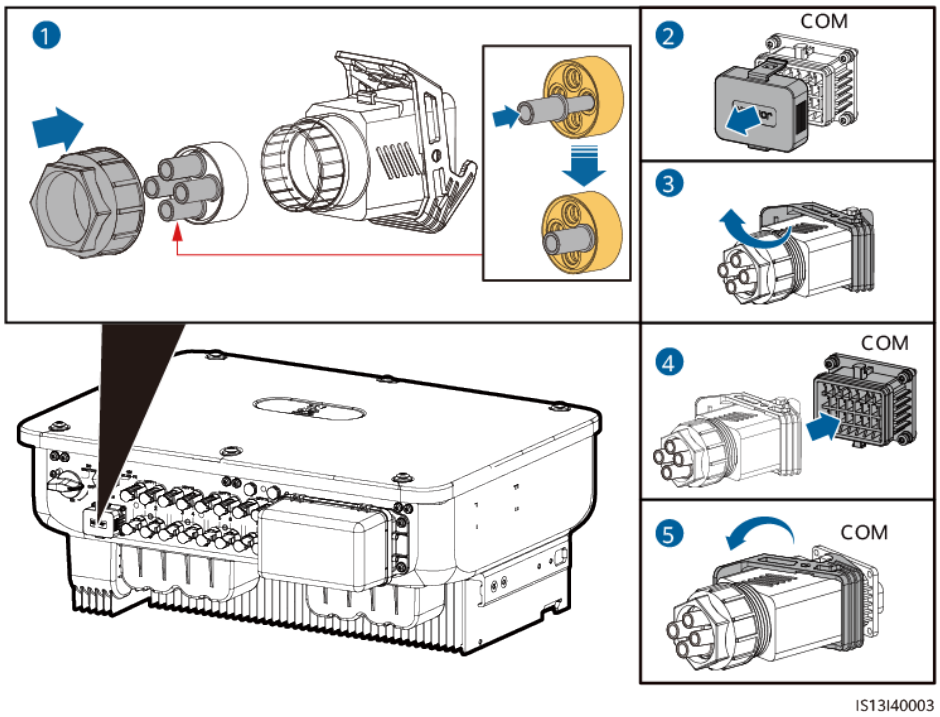


## 5.7.1 Communication Modes

### RS485 communication

- Smart Dongle networking

**Figure 5-21** Smart Dongle networking

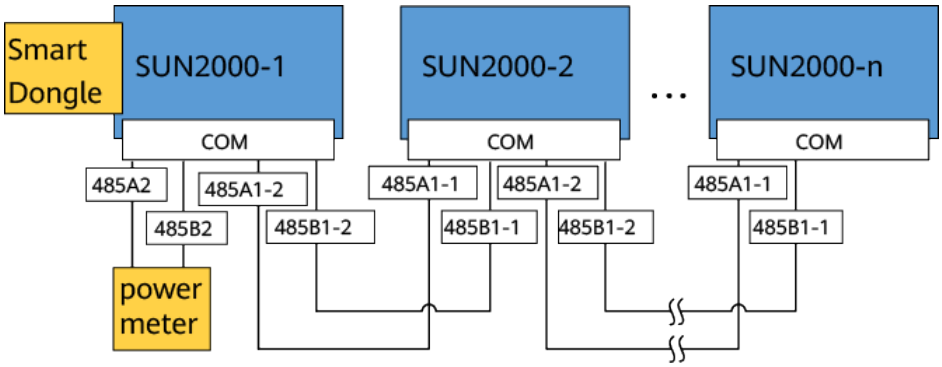


**NOTE**

If the inverter is connected to the Smart Dongle, it cannot be connected to the SmartLogger.

- SmartLogger networking

 Copyright © Huawei Technologies Co., Ltd. 

**Figure 5-22** SmartLogger networking

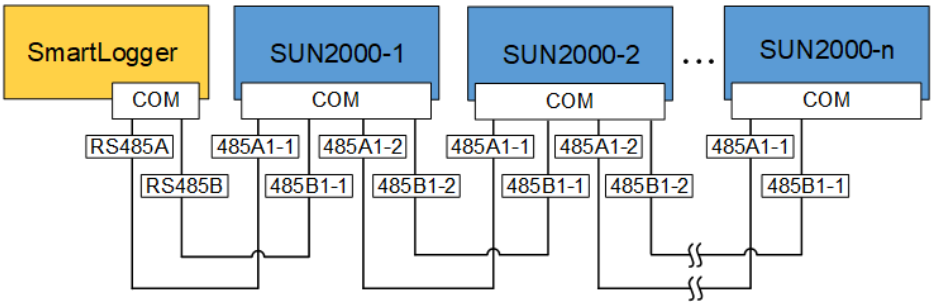


NOTE

- If the inverter is connected to the SmartLogger, it cannot be connected to the Smart Dongle.
- You are advised to connect fewer than 30 devices to each RS485 route.

## MBUS Communication

The MBUS technology transmits communication signals over power cables through a communications board.

NOTE

- You can determine whether the MBUS is supported based on the nameplate on the device.
- Inverters manufactured after July 20, 2022 do not support AC MBUS.
- The built-in MBUS module in the inverter does not need to be connected with cables.
- In utility-scale scenarios, an isolation transformer must be connected between the inverter and loads.
- C&I scenarios are supported only in China.

**Figure 5-23** MBUS communication (utility-scale scenario)

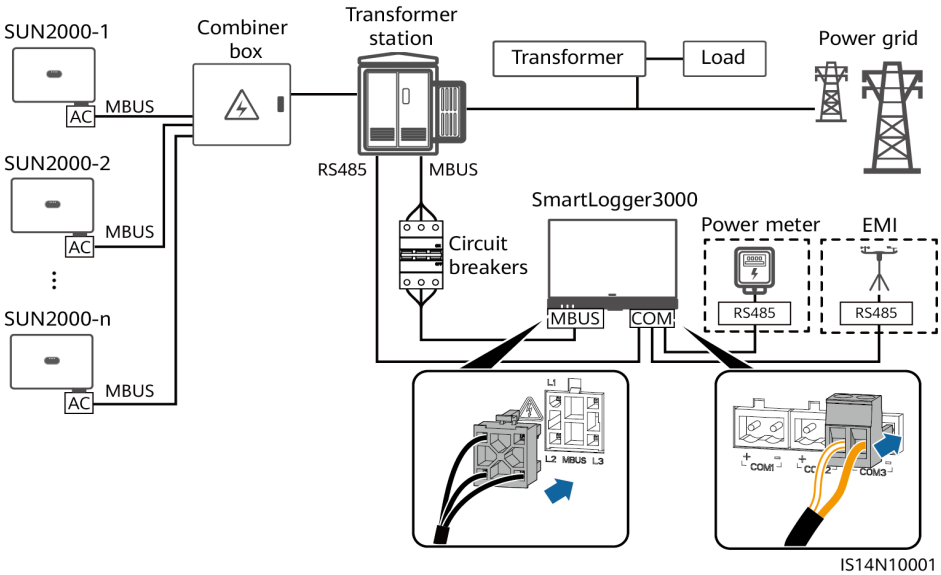



Copyright © Huawei Technologies Co., Ltd.

**Figure 5-24** MBUS communication (C&I scenario in China)

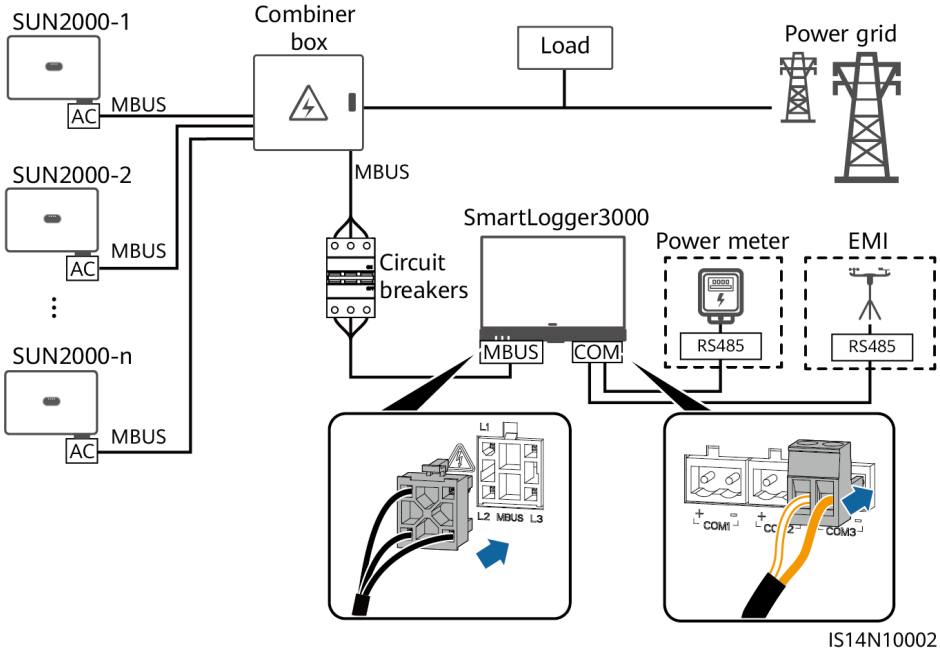


## 5.7.2 (Optional) Connecting the RS485 Communications Cables to the Inverter

### Procedure

**Step 1** Connect the signal cables to the signal cable connector.

 Copyright © Huawei Technologies Co., Ltd. 

**Figure 5-25** Installing the cables

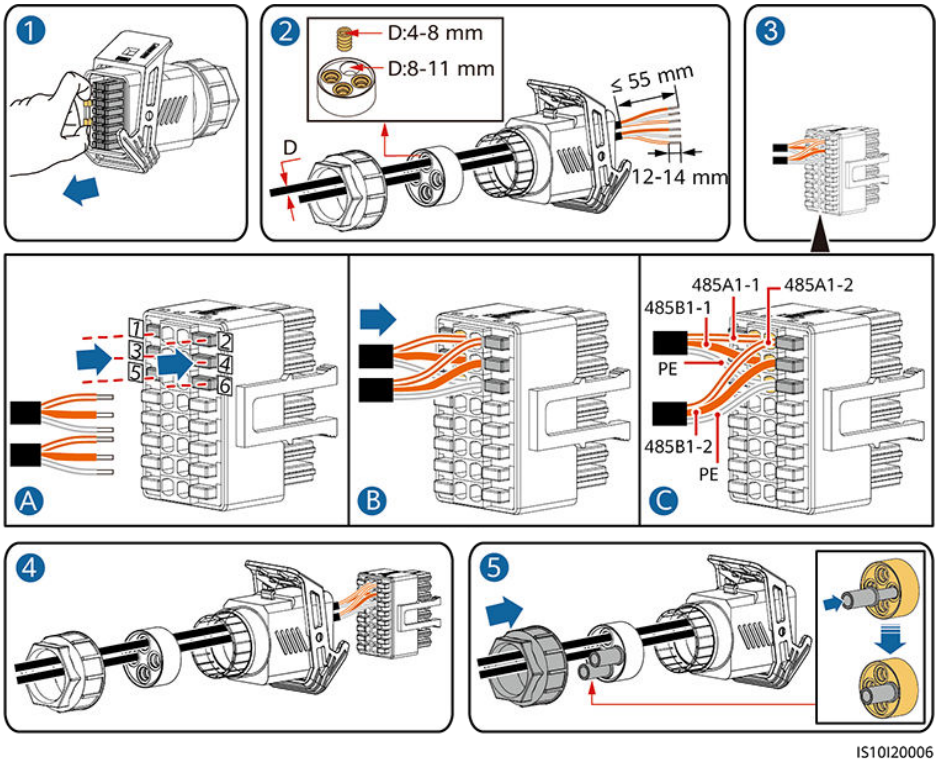


**Step 2** Connect the signal cable connectors to the COM port.

**Figure 5-26** Securing the signal cable connector

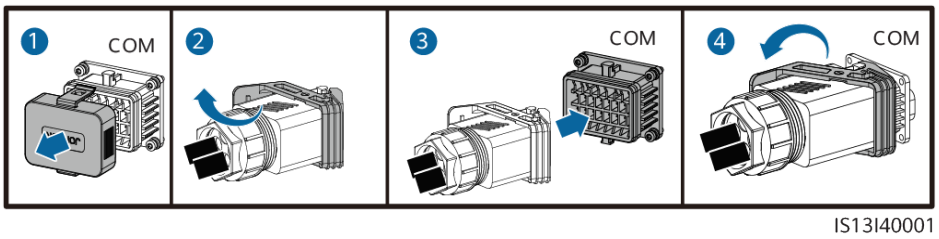


**----End**

## 5.7.3 (Optional) Connecting the RS485 Communications Cable to the Power Meter

### Procedure

**Step 1** Connect the signal cable to the signal cable connector.

 Copyright © Huawei Technologies Co., Ltd. 

**Figure 5-27** Installing the cable

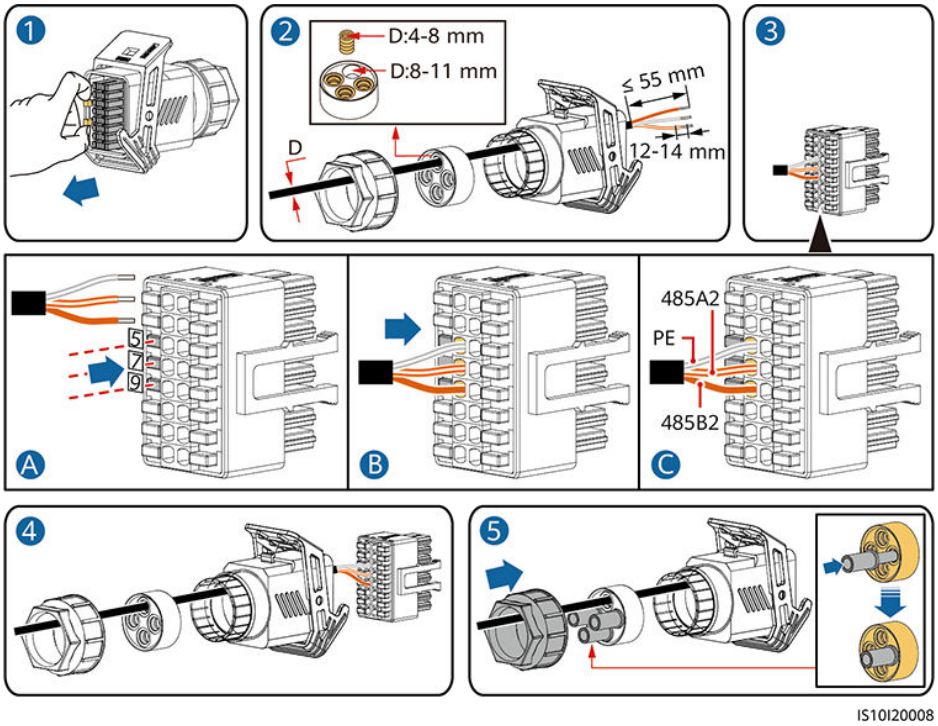


**Step 2** Connect the signal cable connector to the COM port.

**Figure 5-28** Securing the signal cable connector

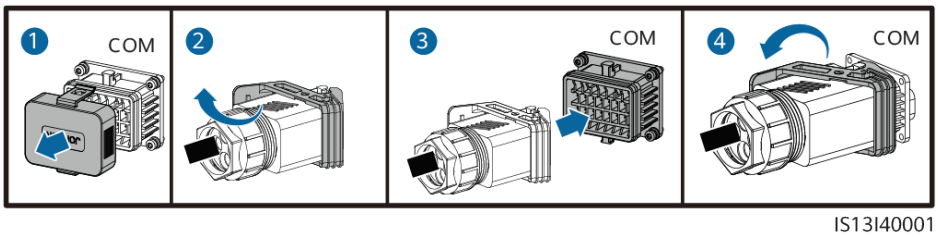


**----End**

## 5.7.4 (Optional) Connecting the Power Grid Scheduling Signal Cable

### Procedure

**Step 1** Connect the signal cable to the signal cable connector.

 Copyright © Huawei Technologies Co., Ltd. 

**Figure 5-29** Installing the cable

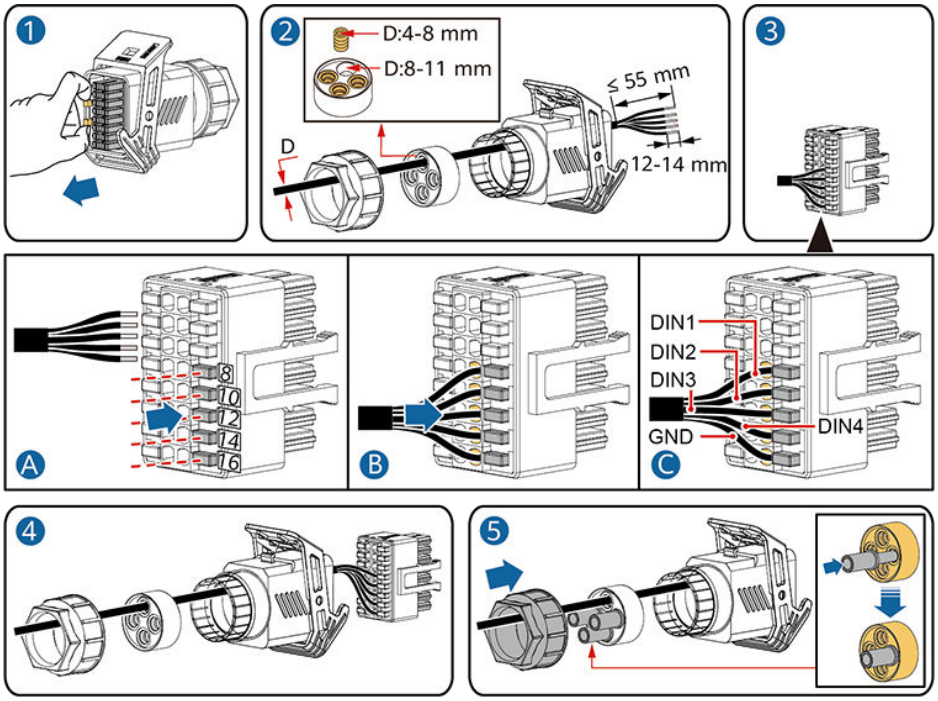


**Step 2** Connect the signal cable connector to the COM port.

**Figure 5-30** Securing the signal cable connector

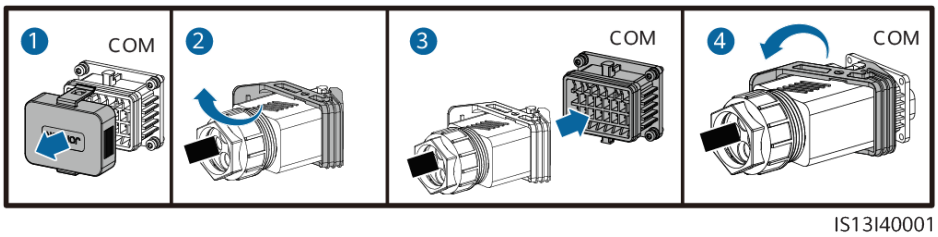


**----End**

## 5.7.5 (Optional) Connecting the Rapid Shutdown Signal Cable

### Procedure

**Step 1** Connect the signal cable to the signal cable connector.

 Copyright © Huawei Technologies Co., Ltd. 

**Figure 5-31** Installing the cable

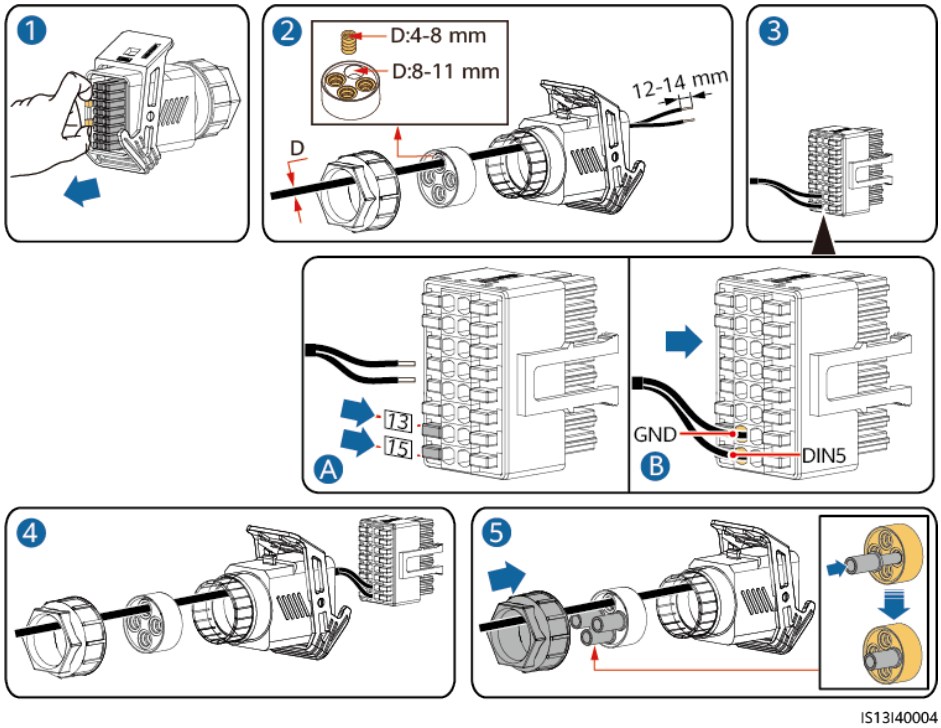


**Step 2** Connect the signal cable connector to the COM port.

**Figure 5-32** Securing the signal cable connector

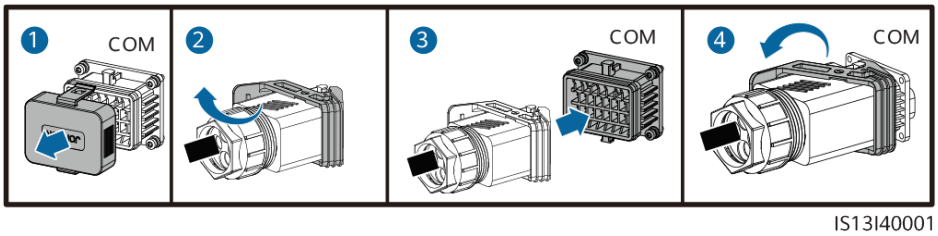


**----End**

 Copyright © Huawei Technologies Co., Ltd. 

# 6 Commissioning

**DANGER**

- Wear personal protective equipment and use dedicated insulated tools to avoid electric shocks or short circuits.

**NOTICE**

Before the equipment is put into operation for the first time, ensure that the parameters are set correctly by professional personnel. Incorrect parameter settings may result in noncompliance with local grid connection requirements and affect the normal operations of the equipment.

## 6.1 Checking Before Power-On

**Table 6-1** Checklist

| No. | Check Item | Acceptance Criteria |
|---|---|---|
| 1 | SUN2000 installation | The SUN2000 is installed correctly and securely. |
| 2 | Smart Dongle | The Smart Dongle is installed correctly and securely. |
| 3 | Cable routing | The cables are routed properly as required by the customer. |
| 4 | Cable ties | Cable ties are evenly distributed and no burr exists. |
| 5 | Reliable grounding | The PE cable is connected correctly and securely. |

 Copyright © Huawei Technologies Co., Ltd. 

| No. | Check Item | Acceptance Criteria |
|---|---|---|
| 6 | Switch | DC switches and all the switches connecting to the SUN2000 are OFF. |
| 7 | Cable connection | The AC output power cable, and DC input power cables are connected correctly and securely. |
| 8 | Unused terminals and ports | Unused terminals and ports are locked by watertight caps. |
| 9 | Installation environment | The installation space is proper, and the installation environment is clean and tidy. |

# 6.2 System Power-On

## Prerequisites

**DANGER**

- Wear personal protective equipment and use dedicated insulated tools to avoid electric shocks or short circuits.

**NOTICE**

- Before turning on the AC switch between the inverter and the power grid, check that the AC voltage is within the specified range using a multimeter.
- If the DC power supply is connected but the AC power supply is disconnected, the inverter will report a **Grid Loss** alarm. The inverter can start properly only after the power grid recovers.

## Procedure

**Step 1** Turn on the AC switch between the inverter and the power grid.

**Step 2** (Optional) Remove the locking screw next to the DC SWITCH.

 Copyright © Huawei Technologies Co., Ltd. 

**Figure 6-1** Removing the DC SWITCH locking screw

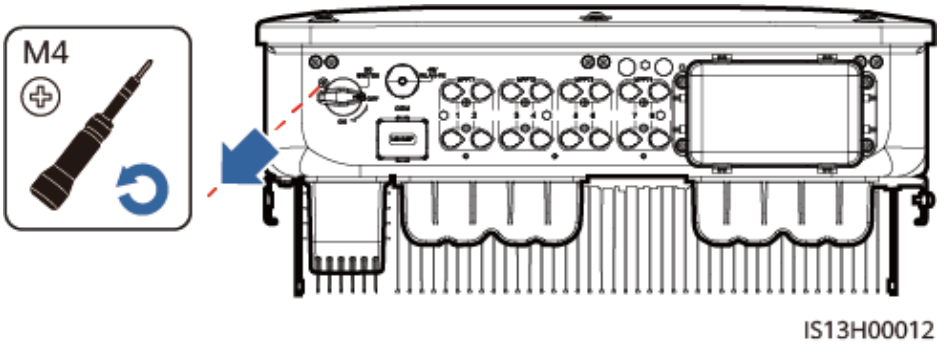


**Step 3** Turn on the **DC SWITCH** at the bottom of the inverter.

**Step 4** Observe the LED indicators to check the operating status of the inverter.

**Table 6-2** LED indicator description

| Category | Status | | Description |
|---|---|---|---|
| Running indicator<br>LED1 LED2 | **LED1** | **LED2** | – |
| | Steady green | Steady green | The inverter is running in on-grid state. |
| | Blinking green slowly (on for 1s and off for 1s) | Off | The DC is on and the AC is off. |
| | Blinking green slowly (on for 1s and off for 1s) | Blinking green slowly (on for 1s and off for 1s) | Both the DC and AC are on, and the inverter is off-grid. |
| | Off | Blinking green slowly | The DC is off and the AC is on. |
| | Off | Off | Both the DC and AC are off. |
| | Blinking red fast (on for 0.2s and off for 0.2s) | – | There is a DC environmental alarm. |
| | – | Blinking red fast (on for 0.2s and off for 0.2s) | There is an AC environmental alarm. |
| | Steady red | Steady red | A fault exists. |
| Communication indicator<br>LED3 | **LED3** | | – |
| | Blinking green fast (on for 0.2s and off for 0.2s) | | Communication is in progress. |

 Copyright © Huawei Technologies Co., Ltd. 

| Category | Status | Description |
|---|---|---|
| | Blinking green slowly (on for 1s and off for 1s) | A mobile phone is connected to the inverter. |
| | Off | There is no communication. |
| Note: If LED1, LED2, and LED3 are steady red, the inverter is faulty and needs to be replaced. | | |

**----End**

 Copyright © Huawei Technologies Co., Ltd. 

# 7 Human-Machine Interaction

**NOTE**

- The FusionSolar app is recommended if the inverter connects to the FusionSolar Smart PV Management System. In areas where the FusionSolar app is unavailable or a third-party management system is used, only the SUN2000 app can be used for commissioning.
- Access Huawei AppGallery, search for **FusionSolar** or **SUN2000**, and download the app installation package. You can also scan a QR code below to download the app. You are advised to use a browser to scan a QR code.

FusionSolar | SUN2000 (Android) | SUN2000 (iOS)

**NOTICE**

- The screenshots are for reference only.
- The initial password for connecting to the inverter WLAN can be obtained from the label on the side of the inverter.
- Set the password upon the first login. You are advised to change the password periodically. After changing the password, remember the new password to ensure account security. Your password might be stolen or cracked if it is left unchanged for extended periods. If a password is lost, devices cannot be accessed. In these cases, the Company shall not be liable for any loss caused to the plant.
- Set the correct grid code based on the application area and scenario of the inverter.

 Copyright © Huawei Technologies Co., Ltd. 

# 7.1 Scenario in Which SUN2000s Are Connected to the FusionSolar Smart PV Management System

## 7.1.1 (Optional) Registering an Installer Account

NOTE

- If you have an installer account, skip this step.
- You can register an account only using a mobile phone only in China.
- The mobile number or email address used for registration is the user name for logging in to the FusionSolar app.

Create the first installer account and create a domain named after the company name.

**Figure 7-1** Creating the first installer account

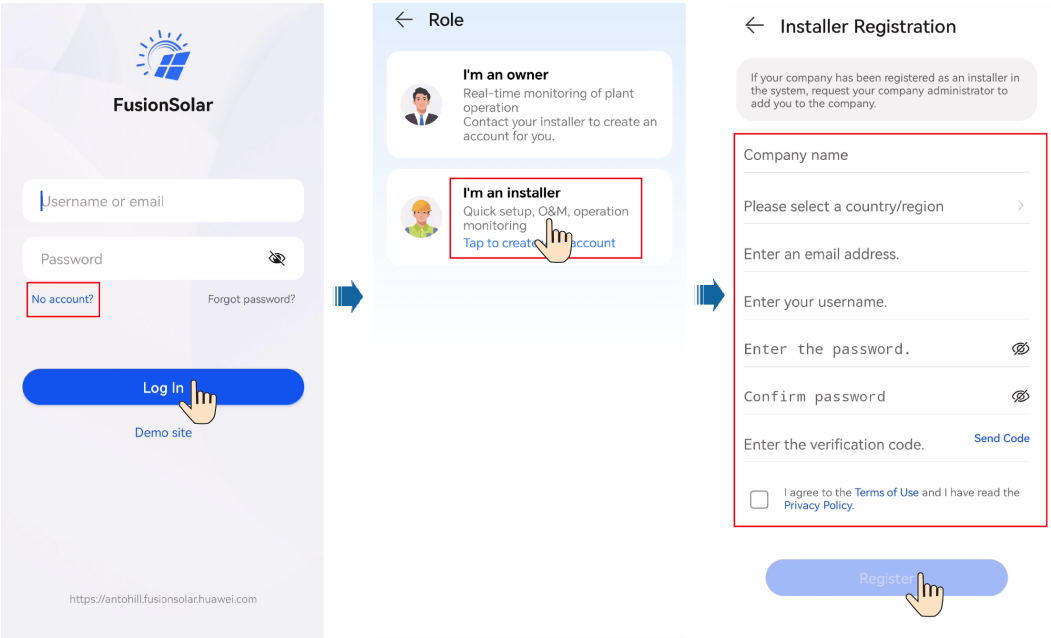


NOTICE

To create multiple installer accounts for a company, log in to the FusionSolar app and tap **Add User** to create an installer account.

 Copyright © Huawei Technologies Co., Ltd. 

**Figure 7-2** Creating multiple installer accounts for the same company

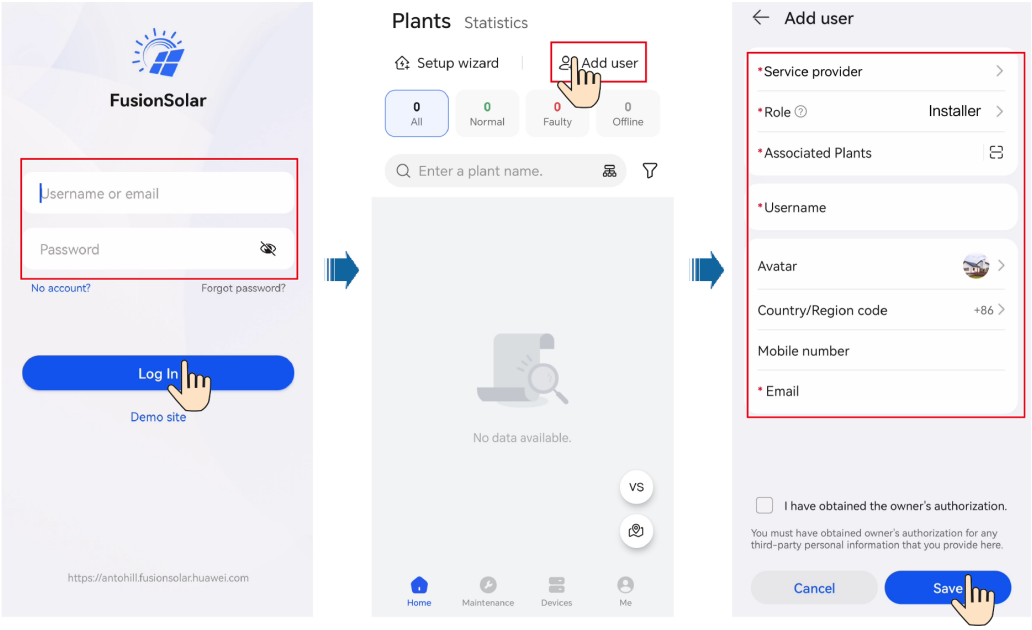



Copyright © Huawei Technologies Co., Ltd.

## 7.1.2 Creating a PV Plant and a User

**Figure 7-3** Creating a PV plant and a user

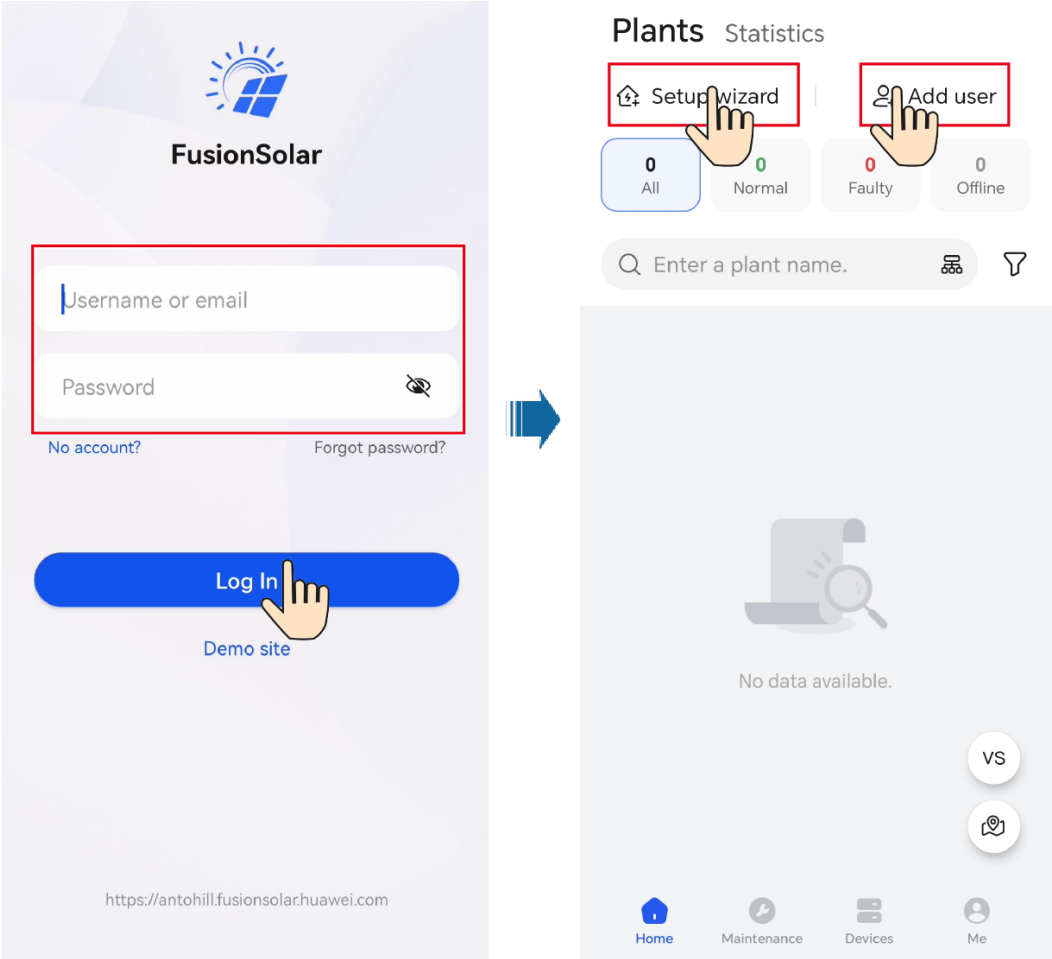


**NOTE**

- In the quick settings for SUN2000-29.9KTL/36KTL/40KTL, the grid code is N/A by default (automatic startup is not supported). Set the grid code based on the area where the PV plant is located.
- Before the equipment is put into operation for the first time, ensure that the parameters are set correctly by professional personnel. Incorrect parameter settings may result in noncompliance with local grid connection requirements and affect the normal operations of the equipment.
- For details about how to use the site deployment wizard, see ***FusionSolar App Quick Guide***.

 Copyright © Huawei Technologies Co., Ltd. 

### 7.1.3 SmartLogger Networking

For details, see **PV Plants Connecting to Huawei Hosting Cloud Quick Guide (Inverters + SmartLogger3000)**, **PV Plants Connecting to SmartPVMS Quick Guide (Inverters + SmartLogger3000 + RS485 Networking)**, or **PV Plants Connecting to SmartPVMS Quick Guide (Inverters + SmartLogger3000 + MBUS Networking)**.

**NOTE**

Inverters manufactured after July 20, 2022 do not support AC MBUS. You can determine whether the MBUS is supported based on the nameplate on the device.

## 7.2 Scenario in Which Inverters Connect to Other Management Systems

**Step 1** Open the SUN2000 app, scan the QR code of the inverter or manually connect to the WLAN hotspot to access the device commissioning screen.

**Step 2** Select **Installer** and enter the login password.

**Step 3** Tap **Log in** to access the quick settings screen or the inverter home screen.

**Figure 7-4** Logging in to the app

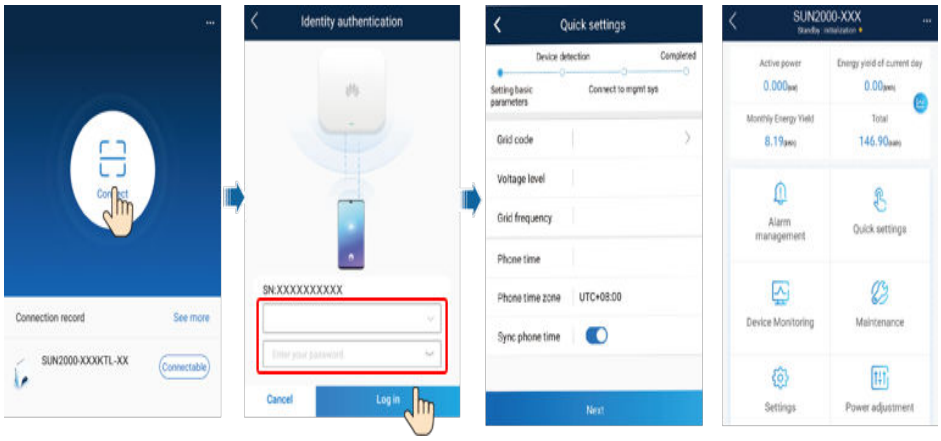


**----End**

## 7.3 Energy Control

### 7.3.1 Grid-tied Point Control

#### Function

The output power of the PV power system can be limited or reduced to ensure that the output power is within the specified range.

## Procedure

**Step 1** On the home screen, choose **Power adjustment** > **Grid-tied point control**.

**Figure 7-5** Grid-tied point control

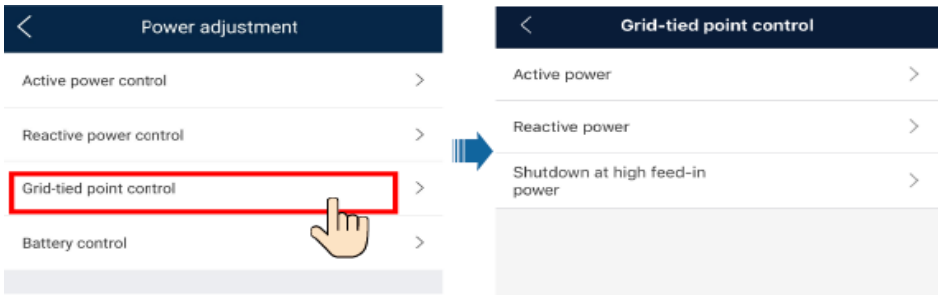


**Table 7-1** Grid-tied point control

| Parameter | | | Description |
|---|---|---|---|
| Active power | Unlimited | - | If this parameter is set to **Unlimited**, the output power of the inverter is not limited and the inverter can connect to the power grid at the rated power. |
| | Grid connection with zero power | Closed-loop controller | • If multiple inverters are cascaded, set this parameter to **SDongle/SmartLogger**.<br>• If there is only one inverter, set this parameter to **Inverter**. |
| | | Limitation mode | • **Total power** indicates export limitation of the total power at the grid-tied point. (When a single-phase power meter is connected, only **Total power** can be selected. When a three-phase meter is connected in three-phase three-wire mode, only **Total power** can be selected.)<br>• **Single-phase power** indicates export limitation of the power in each phase at the grid-tied point. **Single-phase power** can be selected only if a three-phase meter is connected in three-phase four-wire mode. |
| | | Power adjustment period | Specifies the shortest interval for a single export limitation adjustment. |
| | | Power control hysteresis | Specifies the deadband for adjusting the inverter output power. If the power fluctuates within the power control hysteresis, the power is not adjusted. |

 Copyright © Huawei Technologies Co., Ltd. 

| Parameter | | | Description |
|---|---|---|---|
| | | Active power output limit for fail-safe | Specifies the derating value of the inverter active power by percentage. If the Smart Dongle does not detect any power meter data or the communication between the Smart Dongle and the inverter is disconnected, the Smart Dongle delivers the derating value of the inverter active power by percentage. |
| | | Communication disconnection fail-safe | In the inverter export limitation scenario, if this parameter is set to **Enable**, the inverter will derate according to the active power derating percentage when the communication between the inverter and the Smart Dongle is disconnected for a period longer than **Communication disconnection detection time**. |
| | | Communication disconnection detection time | Specifies the fail-safe detection time in case of disconnection between the inverter and the Smart Dongle.<br>This parameter is displayed when **Communication disconnection fail-safe** is set to **Enable**. |
| | Grid connection with limited power (kW) | Closed-loop controller | • If multiple inverters are cascaded, set this parameter to **SDongle/SmartLogger**.<br>• If there is only one inverter, set this parameter to **Inverter**. |
| | | Limitation mode | • **Total power** indicates export limitation of the total power at the grid-tied point. (When a single-phase power meter is connected, only **Total power** can be selected. When a three-phase meter is connected in three-phase three-wire mode, only **Total power** can be selected.)<br>• **Single-phase power** indicates export limitation of the power in each phase at the grid-tied point. **Single-phase power** can be selected only if a three-phase meter is connected in three-phase four-wire mode. |
| | | Maximum grid feed-in power | Specifies the maximum active power transmitted from the grid-tied point to the power grid. |
| | | Power adjustment period | Specifies the shortest interval for a single export limitation adjustment. |
| | | Power control hysteresis | Specifies the deadband for adjusting the inverter output power. If the power fluctuates within the power control hysteresis, the power is not adjusted. |

 Copyright © Huawei Technologies Co., Ltd. 

| Parameter | | | Description |
|---|---|---|---|
| | | Active power output limit for fail-safe | Specifies the derating value of the inverter active power by percentage. If the Smart Dongle does not detect any power meter data or the communication between the Smart Dongle and the inverter is disconnected, the Smart Dongle delivers the derating value of the inverter active power by percentage. |
| | | Communication disconnection fail-safe | In the inverter export limitation scenario, if this parameter is set to **Enable**, the inverter will derate according to the active power derating percentage when the communication between the inverter and the Smart Dongle is disconnected for a period longer than **Communication disconnection detection time**. |
| | | Communication disconnection detection time | Specifies the fail-safe detection time in case of disconnection between the inverter and the Smart Dongle.<br>This parameter is displayed when **Communication disconnection fail-safe** is set to **Enable**. |
| | Grid connection with limited power (%) | Closed-loop controller | • If multiple inverters are cascaded, set this parameter to **SDongle/SmartLogger**.<br>• If there is only one inverter, set this parameter to **Inverter**. |
| | | Limitation mode | • **Total power** indicates export limitation of the total power at the grid-tied point. (When a single-phase power meter is connected, only **Total power** can be selected. When a three-phase meter is connected in three-phase three-wire mode, only **Total power** can be selected.)<br>• **Single-phase power** indicates export limitation of the power in each phase at the grid-tied point. **Single-phase power** can be selected only if a three-phase meter is connected in three-phase four-wire mode. |
| | | PV plant capacity | Specifies the total maximum active power in the inverter cascading scenario. |
| | | Maximum grid feed-in power | Specifies the percentage of the maximum active power at the grid-tied point to the PV plant capacity. |
| | | Power adjustment period | Specifies the shortest interval for a single export limitation adjustment. |
| | | Power control hysteresis | Specifies the deadband for adjusting the inverter output power. If the power fluctuates within the power control hysteresis, the power is not adjusted. |

 Copyright © Huawei Technologies Co., Ltd. 

| Parameter | | | Description |
|---|---|---|---|
| | | Active power output limit for fail-safe | Specifies the derating value of the inverter active power by percentage. If the Smart Dongle does not detect any power meter data or the communication between the Smart Dongle and the inverter is disconnected, the Smart Dongle delivers the derating value of the inverter active power by percentage. |
| | | Communication disconnection fail-safe | In the inverter export limitation scenario, if this parameter is set to **Enable**, the inverter will derate according to the active power derating percentage when the communication between the inverter and the Smart Dongle is disconnected for a period longer than **Communication disconnection detection time**. |
| | | Communication disconnection detection time | Specifies the fail-safe detection time in case of disconnection between the inverter and the Smart Dongle.<br>This parameter is displayed when **Communication disconnection fail-safe** is set to **Enable**. |
| Shutdown at high feed-in power[a] | Shutdown at high feed-in power | | ● The default value is **Disable**.<br>● If this parameter is set to **Enable**, the inverter shuts down for protection when the power at the grid-tied point exceeds the threshold and remains in this condition for the specified time threshold. |
| | Upper feed-in power threshold for inverter shutdown (kW) | | The default value is **0**. This parameter specifies the power threshold of the grid-tied point for triggering inverter shutdown. |
| | High feed-in power duration threshold for triggering inverter shutdown (s) | | The default value is **20**. This parameter specifies the duration threshold of high feed-in power for triggering inverter shutdown.<br>● When **High feed-in power duration threshold for triggering inverter shutdown** is set to **5**, **Shutdown at high feed-in power** takes precedence.<br>● When **High feed-in power duration threshold for triggering inverter shutdown** is set to **20**, **Grid connection with limited power** takes precedence (when **Active power control** is set to **Grid connection with limited power**). |
| Note a: This parameter is supported only for the AS4777 or G99-TYPEA-LV grid code. | | | |

**----End**

# 7.3.2 Setting Feed-in at Limited Current

## Function

The output current of the PV power system can be limited or reduced to ensure that the output current is within the specified range.

This function applies only to the commercial and industrial (C&I) scenarios in the UK where the grid code is G99-TYPEA-LV, G99-TYPEB-LV, G99-TYPEB-HV, G99-TYPEB-HV-MV480, or G99-TYPEA-HV. The SUN2000 app version must be later than 6.24.00.563.

### 7.3.2.1 Connecting the App to the Inverter or Smart Dongle

**NOTICE**

If a single inverter is connected to the power grid, a Smart Dongle must be used for networking.

## Procedure

**Step 1** On the home screen, choose **Power adjustment** > **Feed-in at limited current**.

**Figure 7-6** Feed-in at limited current

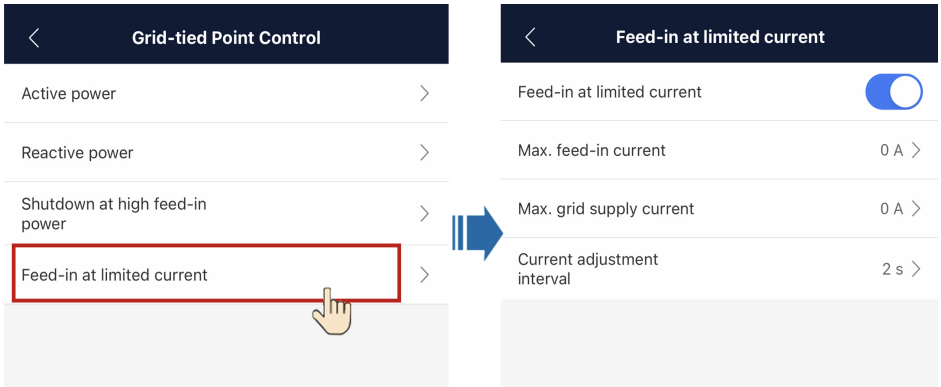


**Table 7-2** Feed-in at limited current

| Parameter | | Description |
|---|---|---|
| Feed-in at limited current[a] | Feed-in at limited current | The default value is **Disable**.<br>• If this parameter is set to **Disable**, feed-in at limited current will be unavailable.<br>• If this parameter is set to **Enable**, feed-in at limited current will be available. |

 Copyright © Huawei Technologies Co., Ltd. 

| Parameter | | Description |
|---|---|---|
| | Max. feed-in current[b] | Value range: [0, 30000 A]<br>● Due to external disturbances, the feed-in current may exceed the specified value by 2%. In this case, the inverter will adjust the current to a value within the range limit.<br>● After the user changes the maximum feed-in current, the inverter will adjust the current to a value within the range limit. |
| | Max. grid supply current | Value range: [0, 30000 A]<br>If the grid supply current exceeds the specified value by 2%, the inverter will adjust the current to a value within the range limit. |
| | Current adjustment interval | Value range: [1, 5s]<br>You are advised to keep the default value. A larger value indicates a lower current adjustment speed.<br>If this parameter is set to 2s and the current at the grid connection point exceeds the threshold, the inverter adjusts the current every 2s. |
| Note a: If the inverter shuts down because the feed-in current adjustment is not complete within the specified time, the user needs to manually start the inverter. By default, the number of manual startups cannot exceed three within 30 days. If this limit is reached, it is not allowed to manually start the inverter again.<br>Note b: If the maximum feed-in current is not adjusted to a value within the range limit within 15s, the inverter will shut down and report a **Power Control Abnormal at Grid Connection Point** alarm. | | |

**----End**

### 7.3.2.2 Scenario Where the App Connects to the SmartLogger

**NOTICE**

If multiple inverters are cascaded, the SmartLogger must be used.

## Procedure

**Step 1** On the home screen, choose **Power adjustment** > **Feed-in at limited current**.

**Figure 7-7** Feed-in at limited current

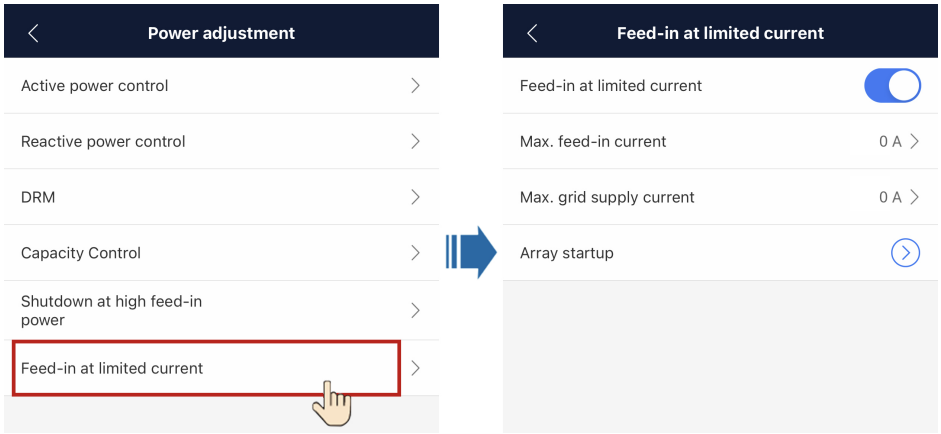


**Table 7-3** Feed-in at limited current

| Parameter | | Description |
|---|---|---|
| Feed-in at limited current[a] | Feed-in at limited current | The default value is **Disable**.<br>• If this parameter is set to **Disable**, feed-in at limited current will be unavailable.<br>• If this parameter is set to **Enable**, feed-in at limited current will be available. |
| | Max. feed-in current[b] | Value range: [0, 30000 A]<br>• Due to external disturbances, the feed-in current may exceed the specified value by 2%. In this case, the inverter will adjust the current to a value within the range limit.<br>• After the user changes the maximum feed-in current, the inverter will adjust the current to a value within the range limit. |
| | Max. grid supply current | Value range: [0, 30000 A]<br>If the grid supply current exceeds the specified value by 2%, the inverter will adjust the current to a value within the range limit. |
| | Array startup | If devices in the array shut down because the feed-in current at the grid connection point is not complete, you can start all inverters in the array by one click. |
| Note a: If the inverter shuts down because the feed-in current adjustment is not complete within the specified time, the user needs to manually start the inverter. By default, the user needs to wait for at least 4 hours before starting the inverter.<br>Note b: If the maximum feed-in current is not adjusted to a value within the range limit within 15s, the inverter will shut down and report a **Power Control Abnormal at Grid Connection Point** alarm. | | |

**----End**

 Copyright © Huawei Technologies Co., Ltd. 

## 7.3.3 Apparent Power Control on the Inverter Output Side

On the home screen, tap **Settings** > **Power adjustment** and set inverter parameters.

**Figure 7-8** Apparent power control

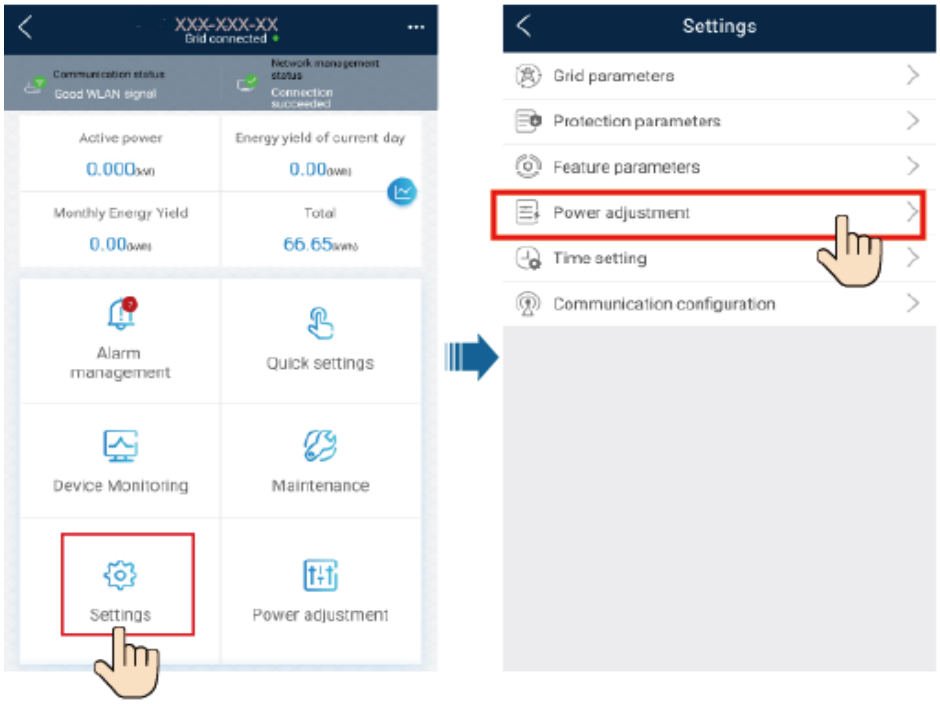


**Table 7-4** Apparent power control

| Parameter | Description | Value Range |
|---|---|---|
| Maximum apparent power (kVA) | Specifies the output upper threshold for the maximum apparent power to adapt to the capacity requirements of standard and customized solar inverters. | [Maximum active power, $S_{max}$] |
| Highest active power (kW) | Specifies the output upper threshold for the maximum active power to adapt to different market requirements. | [0.1, $P_{max}$] |

**NOTE**

The lower threshold for the maximum apparent power is the maximum active power. To lower the maximum apparent power, lower the maximum active power first.

 Copyright © Huawei Technologies Co., Ltd. 

# 8 Maintenance

**DANGER**

- Wear personal protective equipment and use dedicated insulated tools to avoid electric shocks or short circuits.

**WARNING**

- Before performing maintenance, power off the equipment, follow the instructions on the delayed discharge label, and wait for a period of time as specified to ensure that the equipment is not energized.

## 8.1 System Power-Off

### Precautions

**WARNING**

After the system is powered off, the inverter is still energized and hot, which may cause electric shocks or burns. Therefore, wait for at least 5 minutes after system power-off and put on protective gloves before working on the inverter.

### Procedure

**Step 1** Send a shutdown command on the app.

**Step 2** Turn off the AC switch between the inverter and the power grid.

**Step 3** Set the **DC SWITCH** at the bottom of the inverter to **OFF**.

**Step 4** (Optional) Install the DC switch locking screw.

 Copyright © Huawei Technologies Co., Ltd. 

**Figure 8-1** Installing the DC switch locking screw

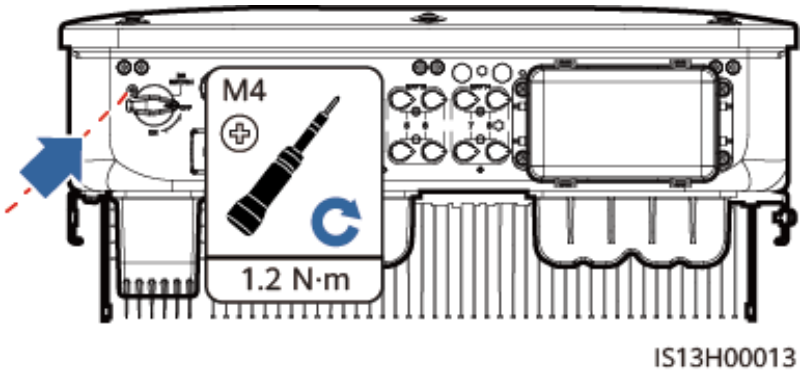


**Step 5** Turn off the DC switch (if any) between the inverter and PV strings.

**----End**

# 8.2 Routine Maintenance

To ensure that the inverter can operate properly for a long term, you are advised to perform routine maintenance on it as described in this section.

**CAUTION**

Power off the system before cleaning the system, connecting cables, and checking grounding reliability.

**Table 8-1** Maintenance checklist

| Check Item | Check Method | Maintenance Interval |
|---|---|---|
| System cleanliness | Check whether the heat sinks are blocked or dirty. | Once every 6 to 12 months |
| System running status | • Check whether the inverter is damaged or deformed.<br>• Check whether the inverter generates abnormal sound during operation.<br>• Check whether all inverter parameters are correctly set during operation. | Once every 6 months |
| Electrical connections | • Check whether cables are disconnected or loose.<br>• Check whether cables are damaged, especially whether the cable sheath that contacts a metal surface is damaged. | 6 months after the first commissioning and once every 6 to 12 months after that |

 Copyright © Huawei Technologies Co., Ltd. 

| Check Item | Check Method | Maintenance Interval |
| --- | --- | --- |
| Grounding reliability | Check whether ground cables are securely connected. | 6 months after the first commissioning and once every 6 to 12 months after that |
| Sealing | Check whether all terminals and ports are properly sealed. | Once 12 months |
| Vegetation around the inverter | • Perform inspection and weeding as required.<br>• Clean the site promptly after weeding. | Based on the local wilting season |

# 8.3 Alarm Reference

For details about alarms, see **Inverter Alarm Reference**.

 Copyright © Huawei Technologies Co., Ltd. 

# 9 Handling the Inverter

## 9.1 Removing the SUN2000

**NOTICE**

Before removing the SUN2000, disconnect both AC and DC connections.

Perform the following operations to remove the SUN2000:

1. Disconnect all cables from the SUN2000, including RS485 communications cables, DC input power cables, AC output power cables, and PGND cables.
2. Remove the SUN2000 from the mounting bracket.
3. Remove the mounting bracket.

## 9.2 Packing the SUN2000

- If the original packing materials are available, put the SUN2000 inside them and then seal them by using adhesive tape.
- If the original packing materials are not available, put the SUN2000 inside a suitable cardboard box and seal it properly.

## 9.3 Disposing of the SUN2000

If the SUN2000 service life expires, dispose of it according to the local disposal rules for electrical equipment waste.

 Copyright © Huawei Technologies Co., Ltd. 

# 10 Technical Specifications

## Efficiency

| Item | SUN2000-20KTL-M3 | SUN2000-20KTL-BRM3 | SUN2000-29.9KTL-M3 | SUN2000-30KTL-M3 | SUN2000-30KTL-BRM3 | SUN2000-36KTL-M3 | SUN2000-40KTL-M3 | SUN2000-40KTL-BRM3 |
|---|---|---|---|---|---|---|---|---|
| Maximum efficiency | 97.1% | | 98.65%/400 V<br>98.75%/480 V | 98.65%/400 V<br>98.75%/480 V | | 98.65%/400 V<br>98.75%/480 V | 98.65%/400 V<br>98.75%/480 V | |
| European efficiency | 96.7% | | 98.4%/400 V<br>98.45%/480 V | 98.4%/400 V<br>98.45%/480 V | | 98.4%/400 V<br>98.5%/480 V | 98.4%/400 V<br>98.5%/480 V | |

## Input

| Item | SUN2000-20KTL-M3 | SUN2000-20KTL-BRM3 | SUN2000-29.9KTL-M3 | SUN2000-30KTL-M3 | SUN2000-30KTL-BRM3 | SUN2000-36KTL-M3 | SUN2000-40KTL-M3 | SUN2000-40KTL-BRM3 |
|---|---|---|---|---|---|---|---|---|
| Recommended maximum input DC power | 30,000 W | | 44,850 W | 45,000 W | | 54,000 W | 60,000 W | |
| Maximum input voltage[a] | 800 V | | 1100 V | | | | | |

| Item | SUN2000-20KTL-M3 | SUN2000-20KTL-BRM3 | SUN2000-29.9KTL-M3 | SUN2000-30KTL-M3 | SUN2000-30KTL-BRM3 | SUN2000-36KTL-M3 | SUN2000-40KTL-M3 | SUN2000-40KTL-BRM3 |
|---|---|---|---|---|---|---|---|---|
| Maximum input current per MPPT circuit | 27 A | | | | | | | |
| Maximum short-circuit current per MPPT circuit | 40 A | | | | | | | |
| Minimum startup voltage | 200 V | | | | | | | |
| Operating voltage range[b] | 200–750 V | | 200–1000 V | | | | | |
| Full-load MPPT voltage range[c] | 300–550 V | | 500–800 V/400 V AC<br>625–850 V/480 V AC | 500–800 V/(380 V AC, 400 V AC)<br>625–850 V/440 V AC<br>625–850 V/480 V AC | | 520–800 V/(380 V AC, 400 V AC)<br>625–850 V/440 V AC<br>625–850 V/480 V AC | 540–800 V/(380 V AC, 400 V AC)<br>625–850 V/440 V AC<br>625–850 V/480 V AC | |
| Rated input voltage | 350 V | | 600 V/400 V AC<br>720 V/480 V AC | 600 V/(380 V AC, 400 V AC)<br>650 V/440 V AC<br>720 V/480 V AC | | 600 V/(380 V AC, 400 V AC)<br>650 V/440 V AC 720 V/480 V AC | 600 V/(380 V AC, 400 V AC)<br>650 V/440 V AC<br>720 V/480 V AC | |

 Copyright © Huawei Technologies Co., Ltd. 

| Item | SUN2000-20KTL-M3 | SUN2000-20KTL-BRM3 | SUN2000-29.9KTL-M3 | SUN2000-30KTL-M3 | SUN2000-30KTL-BRM3 | SUN2000-36KTL-M3 | SUN2000-40KTL-M3 | SUN2000-40KTL-BRM3 |
|---|---|---|---|---|---|---|---|---|
| Maximum number of inputs | 8 | | | | | | | |
| Number of MPPT circuits | 4 | | | | | | | |
| Note a: The maximum input voltage is the maximum DC input voltage that the inverter can withstand. If the input voltage exceeds this value, the inverter may be damaged.<br>Note b: If the input voltage is beyond the operating voltage range, the inverter cannot work properly.<br>Note c: The PV strings connecting to the same MPPT circuit shall use the same model and quantity of PV modules. It is recommended that the PV string voltage be higher than the lower threshold of the full-load MPPT voltage. | | | | | | | | |

## Output

| Item | SUN2000-20KTL-M3 | SUN2000-20KTL-BRM3 | SUN2000-29.9KTL-M3 | SUN2000-30KTL-M3 | SUN2000-30KTL-BRM3 | SUN2000-36KTL-M3 | SUN2000-40KTL-M3 | SUN2000-40KTL-BRM3 |
|---|---|---|---|---|---|---|---|---|
| Rated output power | 20,000 W | | 29,900 W | 30,000 W | | 36,000 W | 40,000 W | |
| Maximum apparent power | 22,000 VA | | 29,900 VA | 33,000 VA[a] | | 40,000 VA | 44,000 VA | |
| Maximum active power (cosϕ = 1) | 22,000 W | | 29,900 W | 33,000 W[a] | | 40,000 W | 44,000 W | |

 Copyright © Huawei Technologies Co., Ltd. 

| Item | SUN2000-20KTL-M3 | SUN2000-20KTL-BRM3 | SUN2000-29.9KTL-M3 | SUN2000-30KTL-M3 | SUN2000-30KTL-BRM3 | SUN2000-36KTL-M3 | SUN2000-40KTL-M3 | SUN2000-40KTL-BRM3 |
|---|---|---|---|---|---|---|---|---|
| Rated output voltage[b] | 127 V AC/220 V AC,<br>230 V AC/400 V AC,<br>3W+(N)[c]+PE | | 230 V AC/400 V AC,<br>277 V AC/480 V AC,<br>3W+(N)[c]+PE | 220 V AC/380 V AC,<br>230 V AC/400 V AC,<br>254 V AC/440 V AC,<br>277 V AC/480 V AC,<br>3W+(N)[c]+PE | | 220 V AC/380 V AC,<br>230 V AC/400 V AC,<br>254 V AC/440 V AC,<br>277 V AC/480 V AC,<br>3W+(N)[c]+PE | 220 V AC/380 V AC,<br>230 V AC/400 V AC,<br>254 V AC/440 V AC,<br>277 V AC/480 V AC,<br>3W+(N)[c]+PE | |
| Maximum output voltage at long-term operation | Refer to the local power grid standards. | | | | | | | |
| Rated output current | 52.5 A/220 V AC<br>28.9 A/400 V AC | | 43.2 A/400 V AC<br>36.0 A/480 V AC | 45.6 A/380 V AC<br>43.3 A/400 V AC<br>39.4 A/440 V AC<br>36.1 A/480 V AC | | 54.7 A/380 V AC<br>52.0 A/400 V AC<br>47.3 A/440 V AC<br>43.3 A/480 V AC | 60.8 A/380 V AC<br>57.8 A/400 V AC<br>52.5 A/440 V AC<br>48.1 A/480 V AC | |

 Copyright © Huawei Technologies Co., Ltd. 

| Item | SUN2000-20KTL-M3 | SUN2000-20KTL-BRM3 | SUN2000-29.9KTL-M3 | SUN2000-30KTL-M3 | SUN2000-30KTL-BRM3 | SUN2000-36KTL-M3 | SUN2000-40KTL-M3 | SUN2000-40KTL-BRM3 |
|---|---|---|---|---|---|---|---|---|
| Maximum output current | 58.0 A/220 V AC<br>31.9 A/400 V AC | | 43.2 A/400 V AC<br>36.0 A/480 V AC | 50.4 A/380 V AC<br>47.9 A/400 V AC<br>43.5 A/440 V AC<br>39.9 A/480 V AC | | 61.1 A/380 V AC<br>58.0 A/400 V AC<br>52.8 A/440 V AC (Mexico)<br>48.4 A/480 V AC | 67.2 A/380 V AC<br>63.8 A/400 V AC<br>58.0 A/440 V AC (Mexico)<br>53.2 A/480 V AC | 67.2 A/380 V AC<br>63.8 A/400 V AC<br>58.0 A/440 V AC (Mexico)<br>53.2 A/480 V AC |
| Output voltage frequency | 50 Hz/60 Hz | | | | | | | |
| Power factor | 0.8 leading to 0.8 lagging | | | | | | | |
| Output DC component (DCI) | < 0.5% of the rated output | | | | | | | |
| Maximum total harmonic distortion<br>AC THDi | < 3% under rated conditions. Single harmonic meets the VDE 4105 requirements. | | | | | | | |
| Note a: Under the German VDE-AR-N-4105, Belgium C10/11, and Austrian TOR grid codes, the SUN2000-30KTL-M3 has a maximum apparent power of 30000 VA and a maximum active power (cosϕ=1) of 30000 W.<br>Note b: The rated output voltage is determined by **Grid Codes**, which can be set on the SUN2000 app, SmartLogger, or management system.<br>Note c: You can determine whether to connect the N wire based on the application scenario. In scenarios without N wires, set **Output mode** to **Three-phase three-wire**. In scenarios with N wires, set **Output Mode** to **Three-phase four-wire**. | | | | | | | | |

 Copyright © Huawei Technologies Co., Ltd. 

## Protection

| Item | SUN2000-20KTL-M3 | SUN2000-20KTL-BRM3 | SUN2000-29.9KTL-M3 | SUN2000-30KTL-M3 | SUN2000-30KTL-BRM3 | SUN2000-36KTL-M3 | SUN2000-40KTL-M3 | SUN2000-40KTL-BRM3 |
|---|---|---|---|---|---|---|---|---|
| Overvoltage category | PV II/AC III | | | | | | | |
| Input DC switch | Supported | | | | | | | |
| Anti-islanding protection | Supported | | | | | | | |
| Output overcurrent protection | Supported | | | | | | | |
| Input reverse connection protection | Supported | | | | | | | |
| PV string fault detection | Supported | | | | | | | |
| DC surge protection | Type II | Type II | Type II | Type II/ Type I (optional) | Type II | Type II/ Type I (optional) | Type II/ Type I (optional) | Type II |
| AC surge protection | Type II | | | | | | | |
| Insulation resistance detection | Supported | | | | | | | |

 Copyright © Huawei Technologies Co., Ltd. 

| Item | SUN2000-20KTL-M3 | SUN2000-20KTL-BRM3 | SUN2000-29.9KTL-M3 | SUN2000-30KTL-M3 | SUN2000-30KTL-BRM3 | SUN2000-36KTL-M3 | SUN2000-40KTL-M3 | SUN2000-40KTL-BRM3 |
|---|---|---|---|---|---|---|---|---|
| Residual current monitoring unit (RCMU) | Supported | | | | | | | |

## Display and Communication

| Item | SUN2000-20KTL-M3 | SUN2000-20KTL-BRM3 | SUN2000-29.9KTL-M3 | SUN2000-30KTL-M3 | SUN2000-30KTL-BRM3 | SUN2000-36KTL-M3 | SUN2000-40KTL-M3 | SUN2000-40KTL-BRM3 |
|---|---|---|---|---|---|---|---|---|
| Display | LED indicators; WLAN+App | | | | | | | |
| RS485 | Supported | | | | | | | |
| Built-in WLAN | Supported | | | | | | | |
| AC MBUS | Not supported. Certain spare part models support this function. For details, contact the dealer. | | | | | | | |
| DC MBUS | Supported | | | | | | | |
| AFCI | Supported | | | | | | | |
| PID recovery | Supported | | | | | | | |

## General Specifications

| Item | SUN2000-20KTL-M3 | SUN2000-20KTL-BRM3 | SUN2000-29.9KTL-M3 | SUN2000-30KTL-M3 | SUN2000-30KTL-BRM3 | SUN2000-36KTL-M3 | SUN2000-40KTL-M3 | SUN2000-40KTL-BRM3 |
|---|---|---|---|---|---|---|---|---|
| Dimensions (W x H x D) | 640 mm x 530 mm x 270 mm | | | | | | | |
| Net weight | 43 kg | | | | | | | |

 Copyright © Huawei Technologies Co., Ltd. 

| Item | SUN2000-20KTL-M3 | SUN2000-20KTL-BRM3 | SUN2000-29.9KTL-M3 | SUN2000-30KTL-M3 | SUN2000-30KTL-BRM3 | SUN2000-36KTL-M3 | SUN2000-40KTL-M3 | SUN2000-40KTL-BRM3 |
|---|---|---|---|---|---|---|---|---|
| Operating ambient temperature | –25°C to +60°C (input derated when the temperature is above +45°C) | | | | | | | |
| Relative humidity | 0%–100% | | | | | | | |
| Cooling mode | Natural convection | | | | | | | |
| Maximum operating altitude | 4000 m | | | | | | | |
| Storage temperature | –40°C to +70°C | | | | | | | |
| IP rating | IP66 | | | | | | | |
| Topology | Transformerless | | | | | | | |

 Copyright © Huawei Technologies Co., Ltd. 

## Wireless Communication Specifications

| Item | Inverter Built-in WiFi | WLAN-FE Smart Dongle | 4G Smart Dongle |
|---|---|---|---|
| Frequency | 2400–2483.5 MHz | SDongleA-05:<br>2400–2483.5 MHz | SDongleA-03-CN:<br>● Supports LTE FDD: B1/B3/B8.<br>● Supports LTE TDD: B38/B39/B40/B41.<br>● Supports DC-HSPA+/HSPA+/HSPA/UMTS: B1/B5/B8/B9.<br>● Supports TD-SCDMA: B34/B39.<br>● Supports GSM/GPRS/EDGE: 900 MHz/1800 MHz.<br>SDongleA-03-EU:<br>● Supports LTE FDD: B1/B3/B7/B8/B20.<br>● Supports LTE TDD: B38/B40.<br>● Supports WCDMA/HSDPA/HSUPA/HSPA+: B1/B8.<br>● Supports GSM/GPRS/EDGE: 900 MHz/1800 MHz.<br>SDongleB-06-CN (WiFi):<br>2400–2483.5 MHz<br>SDongleB-06-CN (4G):<br>● Supports LTE FDD: B1/B3/B5/B8.<br>● Supports LTE TDD: B34/B38/B39/B40/B41.<br>● Supports GSM/GPRS/EDGE: 900 MHz/1800 MHz.<br>SDongleB-06-EU (WiFi):<br>2400–2483.5 MHz<br>SDongleB-06-EU (4G):<br>● Supports LTE FDD: B1/B3/B5/B8.<br>● Supports LTE TDD: B7/B20/B28/B38/B40/B41.<br>● Supports GSM/GPRS/EDGE: 900 MHz/1800 MHz.<br>SDongleB-06-AU (WiFi):<br>2400–2483.5 MHz<br>SDongleB-06-AU (4G):<br>● LTE-FDD: B1/B2/B3/B4/B5/B7/B8/B28<br>● LTE-TDD: B40<br>● WCDMA: B1/B2/B5/B8<br>● GSM: 850 MHz/900 MHz/1800 MHz/1900 MHz |

 Copyright © Huawei Technologies Co., Ltd. 

| Item | Inverter Built-in WiFi | WLAN-FE Smart Dongle | 4G Smart Dongle |
|---|---|---|---|
| Protocol standard | WLAN 802.11b/g/n | SDongleA-05:<br>WLAN 802.11b/g/n | SDongleA-03-CN:<br>● Supports LTE FDD (with receive diversity): B1/B3/B5/B8.<br>● Supports LTE TDD (with receive diversity): B34/B38/B39/B40/B41.<br>● Supports WCDMA: B1/B5/B8.<br>● Supports GSM: 900 MHz/1800 MHz.<br>Supports digital audio.<br>SDongleA-03-EU:<br>● Supports LTE FDD (with receive diversity): B1/B3/B7/B8/B20/B28.<br>● Supports LTE FDD (with receive diversity): B38/B40/B41.<br>● Supports WCDMA: B1/B8.<br>● Supports GSM: 900 MHz/1800 MHz.<br>● Supports digital audio.<br>SDongleB-06-CN (WiFi):<br>WLAN 802.11b/g/n<br>SDongleB-06-CN (4G):<br>● Supports LTE FDD (with receive diversity): B1/B3/B5/B8.<br>● Supports LTE TDD (with receive diversity): B34/B38/B39/B40/B41.<br>● Supports GSM: 900 MHz/1800 MHz.<br>● Supports digital audio.<br>SDongleB-06-EU (WiFi):<br>WLAN 802.11b/g/n<br>SDongleB-06-EU (4G):<br>● Supports LTE FDD (with receive diversity): B1/B3/B5/B8.<br>● Supports LTE TDD (with receive diversity): B7/B20/B28/B38/B40/B41.<br>● Supports GSM: 900 MHz/1800 MHz.<br>● Supports digital audio.<br>SDongleB-06-AU (WiFi):<br>WLAN 802.11b/g/n<br>SDongleB-06-AU (4G):<br>● Supports LTE FDD (with receive diversity): B1/B2/B3/B4/B5/B7/B8/B28/B66. |

 Copyright © Huawei Technologies Co., Ltd. 

| Item | Inverter Built-in WiFi | WLAN-FE Smart Dongle | 4G Smart Dongle |
|---|---|---|---|
| | | | ● Supports LTE-TDD (with receive diversity): B40.<br>● Supports WCDMA: B1/B2/B4/B5/B8.<br>● Supports GSM: 850/900/1800/1900 MHz.<br>● Supports digital audio. |

 Copyright © Huawei Technologies Co., Ltd. 

| Item | Inverter Built-in WiFi | WLAN-FE Smart Dongle | 4G Smart Dongle |
|---|---|---|---|
| Bandwidth | 20 MHz/40 MHz (optional) | 20 MHz/40 MHz (optional) | LTE features:<br>● Supports a maximum of 3GPP R8 non-CA Cat 4 FDD and TDD.<br>● Supports 1.4 MHz/3 MHz/5 MHz/10 MHz/15 MHz/20 MHz RF bandwidth.<br>● Supports MIMO in the downlink.<br>● LTE FDD: maximum downlink rate of 150 Mbit/s and maximum uplink rate of 50 Mbit/s<br>● LTE TDD: maximum downlink rate of 130 Mbit/s and maximum uplink rate of 30 Mbit/s<br>UMTS features:<br>● Supports 3GPP R7 HSDPA+, HSDPA, HSUPA, and WCDMA.<br>● Supports QPSK and 16QAM modulation.<br>● HSDPA+: maximum downlink rate of 21 Mbit/s<br>● HSUPA: maximum uplink rate of 5.76 Mbit/s<br>● WCDMA: maximum downlink rate of 384 kbit/s and maximum uplink rate of 384 kbit/s<br>GSM features:<br>GPRS:<br>● Supports GPRS multislot class 12.<br>● Coding schemes: CS-1, CS-2, CS-3, and CS-4<br>● Maximum downlink rate: 85.6 kbit/s; maximum uplink rate: 85.6 kbit/s<br>EDGE:<br>● Supports EDGE multislot class 12.<br>● Supports GMSK and 8-PSK modulation and coding schemes.<br>● Downlink coding format: MCS 1–9<br>● Uplink coding format: MCS 1–9<br>● Maximum downlink rate: 236.8 kbit/s; maximum uplink rate: 236.8 kbit/s |

 Copyright © Huawei Technologies Co., Ltd. 

| Item | Inverter Built-in WiFi | WLAN-FE Smart Dongle | 4G Smart Dongle |
|---|---|---|---|
| Maximum transmit power | ≤ 20 dBm EIRP | ≤ 20 dBm EIRP | • Class 4 (33 dBm±2 dB), EGSM900 frequency band<br>• Class 1 (30 dBm±2 dB), DCS1800 frequency band<br>• Class E2 (27 dBm±3 dB), EGSM900 8-PSK<br>• Class E2 (26 dBm±3 dB), DCS1800 8-PSK<br>• Class 3 (24 dBm+1/–3 dB), WCDMA frequency band<br>• Class 3 (23 dBm±2 dB), LTE FDD frequency band<br>• Class 3 (23 dBm±2 dB), LTE TDD frequency band |

 Copyright © Huawei Technologies Co., Ltd. 

# A Grid Codes

NOTE

The grid codes are subject to change. The listed codes are for reference only.

| No. | Grid Code | Description | SUN2000-20KTL-M3 | SUN2000-20KTL-BRM3 | SUN2000-29.9KTL-M3 | SUN2000-30KTL-M3 | SUN2000-30KTL-BRM3 | SUN2000-36KTL-M3 | SUN2000-40KTL-M3 | SUN2000-40KTL-BRM3 |
|---|---|---|---|---|---|---|---|---|---|---|
| 1 | VDE-AR-N-4105 | Germany low-voltage power grid | - | - | - | Supported | Supported | Supported | Supported | Supported |
| 2 | NB/T 32004 | China low-voltage power grid | - | - | - | Supported | Supported | Supported | Supported | Supported |
| 3 | UTE C 15-712-1(A) | France mainland power grid | - | - | - | Supported | Supported | Supported | Supported | Supported |
| 4 | UTE C 15-712-1(B) | France island power grid | - | - | - | Supported | Supported | Supported | Supported | Supported |
| 5 | UTE C 15-712-1(C) | France island power grid | - | - | Supported | Supported | Supported | Supported | Supported | Supported |
| 6 | VDE 0126-1-1-BU | Bulgaria power grid | - | - | - | Supported | Supported | Supported | Supported | Supported |

 Copyright © Huawei Technologies Co., Ltd. 

| No. | Grid Code | Description | SUN2000-20KTL-M3 | SUN2000-20KTL-BRM3 | SUN2000-29.9KTL-M3 | SUN2000-30KTL-M3 | SUN2000-30KTL-BRM3 | SUN2000-36KTL-M3 | SUN2000-40KTL-M3 | SUN2000-40KTL-BRM3 |
|---|---|---|---|---|---|---|---|---|---|---|
| 7 | VDE 0126-1-1-GR(A) | Greece mainland power grid | - | - | - | Supported | Supported | Supported | Supported | Supported |
| 8 | VDE 0126-1-1-GR(B) | Greece island power grid | - | - | - | Supported | Supported | Supported | Supported | Supported |
| 9 | BDEW-MV | Germany medium-voltage power grid | - | - | - | Supported | Supported | Supported | Supported | Supported |
| 10 | G59-England | England 230 V power grid (I > 16 A) | - | - | - | Supported | Supported | Supported | Supported | Supported |
| 11 | G59-Scotland | Scotland 240 V power grid (I > 16 A) | - | - | - | Supported | Supported | Supported | Supported | Supported |
| 12 | G83-England | England 230 V power grid (I < 16 A) | - | - | - | Supported | Supported | Supported | Supported | Supported |
| 13 | G83-Scotland | Scotland 240 V power grid (I < 16 A) | - | - | - | Supported | Supported | Supported | Supported | Supported |
| 14 | CEI0-21 | Italy power grid | - | - | - | Supported | Supported | Supported | Supported | Supported |
| 15 | RD1699/661 | Spain low-voltage power grid | - | - | - | Supported | Supported | Supported | Supported | Supported |

 Copyright © Huawei Technologies Co., Ltd. 

| No. | Grid Code | Description | SUN2000-20KTL-M3 | SUN2000-20KTL-BRM3 | SUN2000-29.9KTL-M3 | SUN2000-30KTL-M3 | SUN2000-30KTL-BRM3 | SUN2000-36KTL-M3 | SUN2000-40KTL-M3 | SUN2000-40KTL-BRM3 |
|---|---|---|---|---|---|---|---|---|---|---|
| 16 | RD1699/661-MV480 | Spain medium-voltage power grid | - | - | - | Supported | Supported | Supported | Supported | Supported |
| 17 | EN50438-NL | Netherlands power grid | - | - | - | Supported | Supported | Supported | Supported | Supported |
| 18 | C10/11 | Belgium power grid | - | - | - | Supported | Supported | Supported | Supported | Supported |
| 19 | AS4777 | Australia power grid | - | - | Supported | Supported | Supported | Supported | Supported | Supported |
| 20 | AS4777-MV480 | Australia medium-voltage power grid | - | - | Supported | Supported | Supported | Supported | Supported | Supported |
| 21 | AUSTRALIA-NER | Australia NER standard power grid | - | - | Supported | Supported | Supported | Supported | Supported | Supported |
| 22 | AUSTRALIA-NER-MV480 | Australia NER standard power grid | - | - | Supported | Supported | Supported | Supported | Supported | Supported |
| 23 | AS4777-WP | Australia power grid | - | - | Supported | Supported | Supported | Supported | Supported | Supported |
| 24 | AS4777_ACT | Australia power grid | - | - | Supported | - | - | Supported | Supported | Supported |
| 25 | AS4777_NSW_ESS | Australia power grid | - | - | Supported | - | - | Supported | Supported | Supported |

 Copyright © Huawei Technologies Co., Ltd. 

| No. | Grid Code | Description | SUN2000-20KTL-M3 | SUN2000-20KTL-BRM3 | SUN2000-29.9KTL-M3 | SUN2000-30KTL-M3 | SUN2000-30KTL-BRM3 | SUN2000-36KTL-M3 | SUN2000-40KTL-M3 | SUN2000-40KTL-BRM3 |
|---|---|---|---|---|---|---|---|---|---|---|
| 26 | AS4777_NSW_AG | Australia power grid | - | - | Supported | - | - | Supported | Supported | Supported |
| 27 | AS4777_QLD | Australia power grid | - | - | Supported | - | - | Supported | Supported | Supported |
| 28 | AS4777_SA | Australia power grid | - | - | Supported | - | - | Supported | Supported | Supported |
| 29 | AS4777_VIC | Australia power grid | - | - | Supported | - | - | Supported | Supported | Supported |
| 30 | AUSTRALIA-AS4777_A-LV230 | Australia power grid | - | - | Supported | - | - | Supported | Supported | Supported |
| 31 | AUSTRALIA-AS4777_B-LV230 | Australia power grid | - | - | Supported | - | - | Supported | Supported | Supported |
| 32 | AUSTRALIA-AS4777_C-LV230 | Australia power grid | - | - | Supported | - | - | Supported | Supported | Supported |
| 33 | AUSTRALIA-AS4777_NZ-LV230 | Australia power grid | - | - | Supported | - | - | Supported | Supported | Supported |
| 34 | IEC61727 | IEC 61727 low-voltage grid-connection (50 Hz) | Supported | Supported | - | Supported | Supported | Supported | Supported | Supported |
| 35 | Custom (50 Hz) | Reserved | - | - | - | Supported | Supported | Supported | Supported | Supported |
| 36 | Custom (60 Hz) | Reserved | - | - | - | Supported | Supported | Supported | Supported | Supported |


Copyright © Huawei Technologies Co., Ltd.

| No. | Grid Code | Description | SUN2000-20KTL-M3 | SUN2000-20KTL-BRM3 | SUN2000-29.9KTL-M3 | SUN2000-30KTL-M3 | SUN2000-30KTL-BRM3 | SUN2000-36KTL-M3 | SUN2000-40KTL-M3 | SUN2000-40KTL-BRM3 |
|---|---|---|---|---|---|---|---|---|---|---|
| 37 | CEI0-16 | Italy power grid | - | - | - | Supported | Supported | Supported | Supported | Supported |
| 38 | CHINA-MV480 | China medium-voltage standard power grid | - | - | - | Supported | Supported | Supported | Supported | Supported |
| 39 | CHINA-MV | China medium-voltage standard power grid | - | - | - | Supported | Supported | Supported | Supported | Supported |
| 40 | TAI-PEA | Thailand grid-connection standard | - | - | - | Supported | Supported | Supported | Supported | Supported |
| 41 | TAI-MEA | Thailand grid-connection standard | - | - | - | Supported | Supported | Supported | Supported | Supported |
| 42 | BDEW-MV480 | Germany medium-voltage standard power grid | - | - | - | Supported | Supported | Supported | Supported | Supported |
| 43 | Custom MV480 (50 Hz) | Reserved | - | - | - | Supported | Supported | Supported | Supported | Supported |
| 44 | Custom MV480 (60 Hz) | Reserved | - | - | - | Supported | Supported | Supported | Supported | Supported |
| 45 | G59-England-MV480 | UK 480 V medium-voltage grid connection (I > 16 A) | - | - | - | Supported | Supported | Supported | Supported | Supported |

 Copyright © Huawei Technologies Co., Ltd. 

| No. | Grid Code | Description | SUN2000-20KTL-M3 | SUN2000-20KTL-BRM3 | SUN2000-29.9KTL-M3 | SUN2000-30KTL-M3 | SUN2000-30KTL-BRM3 | SUN2000-36KTL-M3 | SUN2000-40KTL-M3 | SUN2000-40KTL-BRM3 |
|---|---|---|---|---|---|---|---|---|---|---|
| 46 | IEC61727-MV480 | IEC 61727 medium-voltage grid-connection (50 Hz) | - | - | - | Supported | Supported | Supported | Supported | Supported |
| 47 | UTE C 15-712-1-MV480 | France island power grid | - | - | - | Supported | Supported | Supported | Supported | Supported |
| 48 | TAI-PEA-MV480 | Thailand medium-voltage grid-connection (PEA) | - | - | - | Supported | Supported | Supported | Supported | Supported |
| 49 | TAI-MEA-MV480 | Thailand medium-voltage grid-connection (MEA) | - | - | - | Supported | Supported | Supported | Supported | Supported |
| 50 | EN50438-DK-MV480 | Denmark medium-voltage grid-connection | - | - | - | Supported | Supported | Supported | Supported | Supported |
| 51 | EN50438-TR-MV480 | Türkiye medium-voltage power grid | - | - | - | Supported | Supported | Supported | Supported | Supported |
| 52 | EN50438-TR | Türkiye low-voltage power grid | - | - | - | Supported | Supported | Supported | Supported | Supported |
| 53 | C11/C10-MV480 | Belgium medium-voltage power grid | - | - | - | Supported | Supported | Supported | Supported | Supported |

 Copyright © Huawei Technologies Co., Ltd. 

| No. | Grid Code | Description | SUN2000-20KTL-M3 | SUN2000-20KTL-BRM3 | SUN2000-29.9KTL-M3 | SUN2000-30KTL-M3 | SUN2000-30KTL-BRM3 | SUN2000-36KTL-M3 | SUN2000-40KTL-M3 | SUN2000-40KTL-BRM3 |
|---|---|---|---|---|---|---|---|---|---|---|
| 54 | Philippines | Philippines low-voltage power grid | - | - | - | Supported | Supported | Supported | Supported | Supported |
| 55 | Philippines-MV480 | Philippines medium-voltage power grid | - | - | - | Supported | Supported | Supported | Supported | Supported |
| 56 | NRS-097-2-1 | South Africa standard power grid | - | - | - | Supported | Supported | Supported | Supported | Supported |
| 57 | NRS-097-2-1-MV480 | South Africa medium-voltage standard power grid | - | - | - | Supported | Supported | Supported | Supported | Supported |
| 58 | KOREA | South Korea power grid | - | - | - | Supported | Supported | Supported | Supported | Supported |
| 59 | IEEE 1547-MV480 | IEEE 1547-MV480 | - | - | - | Supported | Supported | Supported | Supported | Supported |
| 60 | IEC61727-60Hz | IEC 61727 low-voltage grid-connection (60 Hz) | - | - | - | Supported | Supported | Supported | Supported | Supported |
| 61 | IEC61727-60Hz-MV480 | IEC 61727 medium-voltage grid-connection (60 Hz) | - | - | - | Supported | Supported | Supported | Supported | Supported |

 Copyright © Huawei Technologies Co., Ltd. 

| No. | Grid Code | Description | SUN2000-20KTL-M3 | SUN2000-20KTL-BRM3 | SUN2000-29.9KTL-M3 | SUN2000-30KTL-M3 | SUN2000-30KTL-BRM3 | SUN2000-36KTL-M3 | SUN2000-40KTL-M3 | SUN2000-40KTL-BRM3 |
|---|---|---|---|---|---|---|---|---|---|---|
| 62 | CHINA_MV500 | China medium-voltage standard power grid | - | - | - | Supported | Supported | Supported | Supported | Supported |
| 63 | ANRE | Romania low-voltage power grid (Type A) | - | - | - | Supported | Supported | Supported | Supported | Supported |
| 64 | PO12.3-MV480 | Spain medium-voltage power grid | - | - | - | Supported | Supported | Supported | Supported | Supported |
| 65 | EN50438_IE-MV480 | Ireland medium-voltage power grid | - | - | - | Supported | Supported | Supported | Supported | Supported |
| 66 | EN50438_IE | Ireland low-voltage power grid | - | - | - | Supported | Supported | Supported | Supported | Supported |
| 67 | IEC61727-50Hz-MV500 | India 500 V medium-voltage power grid | - | - | - | Supported | Supported | Supported | Supported | Supported |
| 68 | CEI0-16-MV480 | Italy medium-voltage power grid | - | - | - | Supported | Supported | Supported | Supported | Supported |
| 69 | PO12.3 | Spain low-voltage power grid | - | - | - | Supported | Supported | Supported | Supported | Supported |


Copyright © Huawei Technologies Co., Ltd.

| No. | Grid Code | Description | SUN2000-20KTL-M3 | SUN2000-20KTL-BRM3 | SUN2000-29.9KTL-M3 | SUN2000-30KTL-M3 | SUN2000-30KTL-BRM3 | SUN2000-36KTL-M3 | SUN2000-40KTL-M3 | SUN2000-40KTL-BRM3 |
|---|---|---|---|---|---|---|---|---|---|---|
| 70 | CEI0-21-MV480 | Italy medium-voltage power grid | - | - | - | Supported | Supported | Supported | Supported | Supported |
| 71 | KOREA-MV480 | South Korea medium-voltage power grid | - | - | - | Supported | Supported | Supported | Supported | Supported |
| 72 | Egypt ETEC | Egypt low-voltage power grid | - | - | - | Supported | Supported | Supported | Supported | Supported |
| 73 | Egypt ETEC-MV480 | Egypt medium-voltage power grid | - | - | - | Supported | Supported | Supported | Supported | Supported |
| 74 | EN50549-LV | Ireland power grid | - | - | - | Supported | Supported | Supported | Supported | Supported |
| 75 | EN50549-MV480 | Ireland medium-voltage power grid | - | - | - | Supported | Supported | Supported | Supported | Supported |
| 76 | Jordan-Transmission | Jordan low-voltage power grid | - | - | - | Supported | Supported | Supported | Supported | Supported |
| 77 | Jordan-Transmission-MV480 | Jordan medium-voltage power grid | - | - | - | Supported | Supported | Supported | Supported | Supported |
| 78 | NAMIBIA | Namibia power grid | - | - | - | Supported | Supported | Supported | Supported | Supported |

 Copyright © Huawei Technologies Co., Ltd. 

| No. | Grid Code | Description | SUN2000-20KTL-M3 | SUN2000-20KTL-BRM3 | SUN2000-29.9KTL-M3 | SUN2000-30KTL-M3 | SUN2000-30KTL-BRM3 | SUN2000-36KTL-M3 | SUN2000-40KTL-M3 | SUN2000-40KTL-BRM3 |
|---|---|---|---|---|---|---|---|---|---|---|
| 79 | ABNT NBR 16149 | Brazil power grid | - | - | - | Supported | Supported | Supported | Supported | Supported |
| 80 | ABNT NBR 16149-MV480 | Brazil medium-voltage power grid | - | - | - | Supported | Supported | Supported | Supported | Supported |
| 81 | SA_RPPs | South Africa low-voltage power grid | - | - | - | Supported | Supported | Supported | Supported | Supported |
| 82 | SA_RPPs-MV480 | South Africa medium-voltage power grid | - | - | - | Supported | Supported | Supported | Supported | Supported |
| 83 | INDIA | India low-voltage power grid | - | - | - | Supported | Supported | Supported | Supported | Supported |
| 84 | INDIA-MV500 | India medium-voltage power grid | - | - | - | Supported | Supported | Supported | Supported | Supported |
| 85 | ZAMBIA | Zambia low-voltage power grid | - | - | - | Supported | Supported | Supported | Supported | Supported |
| 86 | ZAMBIA-MV480 | Zambia medium-voltage power grid | - | - | - | Supported | Supported | Supported | Supported | Supported |

 Copyright © Huawei Technologies Co., Ltd. 

| No. | Grid Code | Description | SUN2000-20KTL-M3 | SUN2000-20KTL-BRM3 | SUN2000-29.9KTL-M3 | SUN2000-30KTL-M3 | SUN2000-30KTL-BRM3 | SUN2000-36KTL-M3 | SUN2000-40KTL-M3 | SUN2000-40KTL-BRM3 |
|---|---|---|---|---|---|---|---|---|---|---|
| 87 | Chile | Chile low-voltage power grid | - | - | - | Supported | Supported | Supported | Supported | Supported |
| 88 | Chile-MV480 | Chile medium-voltage power grid | - | - | - | Supported | Supported | Supported | Supported | Supported |
| 89 | Mexico-MV480 | Mexico medium-voltage power grid | - | - | - | Supported | Supported | Supported | Supported | Supported |
| 90 | Malaysian | Malaysia low-voltage power grid | - | - | - | Supported | Supported | Supported | Supported | Supported |
| 91 | Malaysian-MV480 | Malaysia medium-voltage power grid | - | - | - | Supported | Supported | Supported | Supported | Supported |
| 92 | KENYA_ETHIOPIA | Kenya low-voltage power grid and Ethiopia power grid | - | - | - | Supported | Supported | Supported | Supported | Supported |
| 93 | KENYA_ETHIOPIA-MV480 | Kenya low-voltage power grid and Ethiopia medium-voltage power grid | - | - | - | Supported | Supported | Supported | Supported | Supported |


Copyright © Huawei Technologies Co., Ltd.

| No. | Grid Code | Description | SUN2000-20KTL-M3 | SUN2000-20KTL-BRM3 | SUN2000-29.9KTL-M3 | SUN2000-30KTL-M3 | SUN2000-30KTL-BRM3 | SUN2000-36KTL-M3 | SUN2000-40KTL-M3 | SUN2000-40KTL-BRM3 |
|---|---|---|---|---|---|---|---|---|---|---|
| 94 | NIGERIA | Nigeria low-voltage power grid | - | - | - | Supported | Supported | Supported | Supported | Supported |
| 95 | NIGERIA-MV480 | Nigeria medium-voltage power grid | - | - | - | Supported | Supported | Supported | Supported | Supported |
| 96 | DUBAI | Dubai low-voltage power grid | - | - | - | Supported | Supported | Supported | Supported | Supported |
| 97 | DUBAI-MV480 | Dubai medium-voltage power grid | - | - | - | Supported | Supported | Supported | Supported | Supported |
| 98 | Northern Ireland | Northern Ireland low-voltage power grid | - | - | - | Supported | Supported | Supported | Supported | Supported |
| 99 | Northern Ireland-MV480 | Northern Ireland medium-voltage power grid | - | - | - | Supported | Supported | Supported | Supported | Supported |
| 100 | Cameroon | Cameroon low-voltage power grid | - | - | - | Supported | Supported | Supported | Supported | Supported |
| 101 | Cameroon-MV480 | Cameroon medium-voltage power grid | - | - | - | Supported | Supported | Supported | Supported | Supported |


Copyright © Huawei Technologies Co., Ltd.

| No. | Grid Code | Description | SUN2000-20KTL-M3 | SUN2000-20KTL-BRM3 | SUN2000-29.9KTL-M3 | SUN2000-30KTL-M3 | SUN2000-30KTL-BRM3 | SUN2000-36KTL-M3 | SUN2000-40KTL-M3 | SUN2000-40KTL-BRM3 |
|---|---|---|---|---|---|---|---|---|---|---|
| 102 | Jordan-Distribution | Jordan power distribution network low-voltage power grid | - | - | - | Supported | Supported | Supported | Supported | Supported |
| 103 | Jordan-Distribution-MV480 | Jordan power distribution network medium-voltage power grid | - | - | - | Supported | Supported | Supported | Supported | Supported |
| 104 | NAMIBIA_MV480 | Namibia power grid | - | - | - | Supported | Supported | Supported | Supported | Supported |
| 105 | LEBANON | Lebanon low-voltage power grid | - | - | - | Supported | Supported | Supported | Supported | Supported |
| 106 | LEBANON-MV480 | Lebanon medium-voltage power grid | - | - | - | Supported | Supported | Supported | Supported | Supported |
| 107 | ARGENTINA-MV500 | Argentina medium-voltage power grid | - | - | - | Supported | Supported | Supported | Supported | Supported |
| 108 | Jordan-Transmission-HV | Jordan high-voltage power grid | - | - | - | Supported | Supported | Supported | Supported | Supported |


Copyright © Huawei Technologies Co., Ltd.

| No. | Grid Code | Description | SUN2000-20KTL-M3 | SUN2000-20KTL-BRM3 | SUN2000-29.9KTL-M3 | SUN2000-30KTL-M3 | SUN2000-30KTL-BRM3 | SUN2000-36KTL-M3 | SUN2000-40KTL-M3 | SUN2000-40KTL-BRM3 |
|---|---|---|---|---|---|---|---|---|---|---|
| 109 | Jordan-Transmission-HV480 | Jordan high-voltage power grid | - | - | - | Supported | Supported | Supported | Supported | Supported |
| 110 | TUNISIA | Tunisia power grid | - | - | - | Supported | Supported | Supported | Supported | Supported |
| 111 | TUNISIA-MV480 | Tunisia medium-voltage power grid | - | - | - | Supported | Supported | Supported | Supported | Supported |
| 112 | SAUDI | Saudi Arabia power grid | - | - | - | Supported | Supported | Supported | Supported | Supported |
| 113 | SAUDI-MV480 | Saudi Arabia power grid | - | - | - | Supported | Supported | Supported | Supported | Supported |
| 114 | Ghana-MV480 | Ghana medium-voltage power grid | - | - | - | Supported | Supported | Supported | Supported | Supported |
| 115 | Israel | Israel power grid | - | - | - | Supported | Supported | Supported | Supported | Supported |
| 116 | Israel-MV400 | Israel power grid | - | - | - | Supported | Supported | Supported | Supported | Supported |
| 117 | Israel-MV480 | Israel power grid | - | - | - | Supported | Supported | Supported | Supported | Supported |
| 118 | Chile-PMGD | Chile PMGD power grid | - | - | - | Supported | Supported | Supported | Supported | Supported |


Copyright © Huawei Technologies Co., Ltd.

| No. | Grid Code | Description | SUN2000-20KTL-M3 | SUN2000-20KTL-BRM3 | SUN2000-29.9KTL-M3 | SUN2000-30KTL-M3 | SUN2000-30KTL-BRM3 | SUN2000-36KTL-M3 | SUN2000-40KTL-M3 | SUN2000-40KTL-BRM3 |
|---|---|---|---|---|---|---|---|---|---|---|
| 119 | Chile-PMGD-MV480 | Chile PMGD power grid | - | - | - | Supported | Supported | Supported | Supported | Supported |
| 120 | VDE-AR-N4120-HV | VDE 4120 standard power grid | - | - | - | Supported | Supported | Supported | Supported | Supported |
| 121 | VDE-AR-N4120-HV480 | VDE 4120 standard power grid | - | - | - | Supported | Supported | Supported | Supported | Supported |
| 122 | CHINA-LV220/380 | China low-voltage power grid | - | - | - | Supported | Supported | Supported | Supported | Supported |
| 123 | Vietnam | Vietnam power grid | - | - | - | Supported | Supported | Supported | Supported | Supported |
| 124 | Vietnam-MV480 | Vietnam power grid | - | - | - | Supported | Supported | Supported | Supported | Supported |
| 125 | TAIPOWER | Taiwan Power low-voltage power grid | - | - | - | Supported | Supported | Supported | Supported | Supported |
| 126 | TAIPOWER-MV480 | Taiwan Power medium-voltage power grid (480 V) | - | - | - | Supported | Supported | Supported | Supported | Supported |
| 127 | ARGENTINA-MV480 | Argentina medium-voltage power grid | - | - | - | Supported | Supported | Supported | Supported | Supported |

 Copyright © Huawei Technologies Co., Ltd. 

| No. | Grid Code | Description | SUN2000-20KTL-M3 | SUN2000-20KTL-BRM3 | SUN2000-29.9KTL-M3 | SUN2000-30KTL-M3 | SUN2000-30KTL-BRM3 | SUN2000-36KTL-M3 | SUN2000-40KTL-M3 | SUN2000-40KTL-BRM3 |
|---|---|---|---|---|---|---|---|---|---|---|
| 128 | OMAN | Oman low-voltage power grid | - | - | - | Supported | Supported | Supported | Supported | Supported |
| 129 | OMAN-MV480 | Oman medium-voltage power grid | - | - | - | Supported | Supported | Supported | Supported | Supported |
| 130 | KUWAIT | Kuwait low-voltage power grid | - | - | - | Supported | Supported | Supported | Supported | Supported |
| 131 | KUWAIT-MV480 | Kuwait medium-voltage power grid | - | - | - | Supported | Supported | Supported | Supported | Supported |
| 132 | BANGLADESH | Bangladesh low-voltage power grid | - | - | - | Supported | Supported | Supported | Supported | Supported |
| 133 | BANGLADESH-MV480 | Bangladesh medium-voltage power grid | - | - | - | Supported | Supported | Supported | Supported | Supported |
| 134 | Chile-Net_Billing | Chile Net Billing power grid | - | - | - | Supported | Supported | Supported | Supported | Supported |
| 135 | EN50438-NL-MV480 | Netherlands medium-voltage power grid | - | - | - | Supported | Supported | Supported | Supported | Supported |

 Copyright © Huawei Technologies Co., Ltd. 

| No. | Grid Code | Description | SUN2000-20KTL-M3 | SUN2000-20KTL-BRM3 | SUN2000-29.9KTL-M3 | SUN2000-30KTL-M3 | SUN2000-30KTL-BRM3 | SUN2000-36KTL-M3 | SUN2000-40KTL-M3 | SUN2000-40KTL-BRM3 |
|---|---|---|---|---|---|---|---|---|---|---|
| 136 | BAHRAIN | Bahrain low-voltage power grid | - | - | - | Supported | Supported | Supported | Supported | Supported |
| 137 | BAHRAIN-MV480 | Bahrain medium-voltage power grid | - | - | - | Supported | Supported | Supported | Supported | Supported |
| 138 | Fuel_Engine_Grid | Genset hybrid power grid | - | - | - | Supported | Supported | Supported | Supported | Supported |
| 139 | Fuel-Engine-Grid-60Hz | Genset hybrid power grid | - | - | - | Supported | Supported | Supported | Supported | Supported |
| 140 | ARGENTINA | Argentina power grid | - | - | - | Supported | Supported | Supported | Supported | Supported |
| 141 | Mauritius | Mauritius power grid | - | - | - | Supported | Supported | Supported | Supported | Supported |
| 142 | Mauritius-MV480 | Mauritius medium-voltage power grid | - | - | - | Supported | Supported | Supported | Supported | Supported |
| 143 | EN50438-SE | Sweden low-voltage power grid | - | - | - | Supported | Supported | Supported | Supported | Supported |
| 144 | Pakistan | Pakistan power grid | - | - | - | Supported | Supported | Supported | Supported | Supported |
| 145 | Austria | Austria power grid | - | - | - | Supported | Supported | Supported | Supported | Supported |


Copyright © Huawei Technologies Co., Ltd.

| No. | Grid Code | Description | SUN2000-20KTL-M3 | SUN2000-20KTL-BRM3 | SUN2000-29.9KTL-M3 | SUN2000-30KTL-M3 | SUN2000-30KTL-BRM3 | SUN2000-36KTL-M3 | SUN2000-40KTL-M3 | SUN2000-40KTL-BRM3 |
|---|---|---|---|---|---|---|---|---|---|---|
| 146 | Austria-MV480 | Austria medium-voltage power grid | - | - | - | Supported | Supported | Supported | Supported | Supported |
| 147 | G99-TYPEA-LV | UK G99-TYPEA-LV | - | - | - | Supported | Supported | Supported | Supported | Supported |
| 148 | G99-TYPEB-LV | UK G99-TYPEB-LV | - | - | - | Supported | Supported | Supported | Supported | Supported |
| 149 | G99-TYPEB-HV | UK G99-TYPEB-HV | - | - | - | Supported | Supported | Supported | Supported | Supported |
| 150 | G99-TYPEB-HV-MV480 | UK G99-TYPEB-HV medium-voltage | - | - | - | Supported | Supported | Supported | Supported | Supported |
| 151 | G99-TYPEA-HV | UK G99-TYPEA-HV | - | - | - | Supported | Supported | Supported | Supported | Supported |
| 152 | EN50549-MV400 | Ireland new standard power grid | - | - | - | Supported | Supported | Supported | Supported | Supported |
| 153 | VDE-AR-N4110 | Germany medium-voltage power grid (230 V) | - | - | - | Supported | Supported | Supported | Supported | Supported |
| 154 | VDE-AR-N4110-MV480 | Germany medium-voltage standard power grid | - | - | - | Supported | Supported | Supported | Supported | Supported |
| 155 | NTS | Spain power grid | - | - | - | Supported | Supported | Supported | Supported | Supported |

 Copyright © Huawei Technologies Co., Ltd. 

| No. | Grid Code | Description | SUN2000-20KTL-M3 | SUN2000-20KTL-BRM3 | SUN2000-29.9KTL-M3 | SUN2000-30KTL-M3 | SUN2000-30KTL-BRM3 | SUN2000-36KTL-M3 | SUN2000-40KTL-M3 | SUN2000-40KTL-BRM3 |
|---|---|---|---|---|---|---|---|---|---|---|
| 156 | NTS-MV480 | Spain medium-voltage power grid | - | - | - | Supported | Supported | Supported | Supported | Supported |
| 157 | CEA | India CEA low-voltage power grid | - | - | - | Supported | Supported | Supported | Supported | Supported |
| 158 | CEA-MV480 | India CEA medium-voltage power grid | - | - | - | Supported | Supported | Supported | Supported | Supported |
| 159 | SINGAPORE | Singapore low-voltage power grid | - | - | - | Supported | Supported | Supported | Supported | Supported |
| 160 | SINGAPORE-MV480 | Singapore medium-voltage power grid | - | - | - | Supported | Supported | Supported | Supported | Supported |
| 161 | HONGKONG | Hong Kong low-voltage power grid | - | - | - | Supported | Supported | Supported | Supported | Supported |
| 162 | HONGKONG-MV480 | Hong Kong medium-voltage power grid | - | - | - | Supported | Supported | Supported | Supported | Supported |
| 163 | C10/11-MV400 | Belgium medium-voltage power grid | - | - | - | Supported | Supported | Supported | Supported | Supported |

 Copyright © Huawei Technologies Co., Ltd. 

| No. | Grid Code | Description | SUN2000-20KTL-M3 | SUN2000-20KTL-BRM3 | SUN2000-29.9KTL-M3 | SUN2000-30KTL-M3 | SUN2000-30KTL-BRM3 | SUN2000-36KTL-M3 | SUN2000-40KTL-M3 | SUN2000-40KTL-BRM3 |
|---|---|---|---|---|---|---|---|---|---|---|
| 164 | EN50549-SE | Sweden low-voltage power grid | - | - | - | Supported | Supported | Supported | Supported | Supported |
| 165 | EN50549-PL | Poland power grid | - | - | - | Supported | Supported | Supported | Supported | Supported |
| 166 | DANMARK-EN50549-DK1-LV230 | Denmark power grid | - | - | - | Supported | Supported | Supported | Supported | Supported |
| 167 | DANMARK-EN50549-DK2-LV230 | Denmark power grid | - | - | - | Supported | Supported | Supported | Supported | Supported |
| 168 | SWITZERLAND-NA/EEA:2020-LV230 | Switzerland power grid | - | - | - | Supported | Supported | Supported | Supported | Supported |
| 169 | ABNT NBR 16149-LV127 | Brazil low-voltage power grid | Supported | Supported | - | - | - | - | - | - |
| 170 | Mexico-LV220 | Mexico low-voltage power grid | Supported | Supported | - | - | - | - | - | - |
| 171 | Philippines-LV220-50Hz | Philippines low-voltage power grid (50 Hz) | Supported | Supported | - | - | - | - | - | - |

 Copyright © Huawei Technologies Co., Ltd. 

| No. | Grid Code | Description | SUN2000-20KTL-M3 | SUN2000-20KTL-BRM3 | SUN2000-29.9KTL-M3 | SUN2000-30KTL-M3 | SUN2000-30KTL-BRM3 | SUN2000-36KTL-M3 | SUN2000-40KTL-M3 | SUN2000-40KTL-BRM3 |
|---|---|---|---|---|---|---|---|---|---|---|
| 172 | Philippines-LV220-60Hz | Philippines low-voltage power grid (60 Hz) | Supported | Supported | - | - | - | - | - | - |
| 173 | TAIPOWER-LV220 | Taiwan Power low-voltage power grid | Supported | Supported | - | - | - | - | - | - |
| 174 | NC2022 | New Caledonia power grid | - | - | - | Supported | Supported | Supported | Supported | Supported |
| 175 | AUSTRIA-TYPEB-LV400 | Austria power grid | - | - | - | Supported | Supported | Supported | Supported | Supported |
| 176 | AUSTRIA-TYPEB-LV480 | Austria power grid | - | - | - | Supported | Supported | Supported | Supported | Supported |
| 177 | AUSTRIA-TYPEB-MV400 | Austria power grid | - | - | - | Supported | Supported | Supported | Supported | Supported |
| 178 | AUSTRIA-TYPEB-MV480 | Austria power grid | - | - | - | Supported | Supported | Supported | Supported | Supported |
| 179 | EN50438-CZ | Czech Republic power grid[a] | - | - | - | Supported | Supported | Supported | Supported | Supported |
| 180 | CZECH-EN50549-LV230 | Czech Republic power grid[a] | - | - | - | Supported | Supported | Supported | Supported | Supported |
| 181 | BRAZIL-P140-LV220 | Brazil P140 power grid | - | - | - | Supported | Supported | - | Supported | Supported |

 Copyright © Huawei Technologies Co., Ltd. 

| No. | Grid Code | Description | SUN2000-20KTL-M3 | SUN2000-20KTL-BRM3 | SUN2000-29.9KTL-M3 | SUN2000-30KTL-M3 | SUN2000-30KTL-BRM3 | SUN2000-36KTL-M3 | SUN2000-40KTL-M3 | SUN2000-40KTL-BRM3 |
|---|---|---|---|---|---|---|---|---|---|---|
| 182 | BRAZIL-P140-127/220 | Brazil P140 power grid | Supported | Supported | - | - | - | - | - | - |
| 183 | BRAZIL-P140-480 | Brazil P140 power grid | - | - | - | Supported | Supported | - | Supported | Supported |
| 184 | ANRE-MV480 | Romania medium-voltage power grid | - | - | - | Supported | Supported | Supported | Supported | Supported |
| 185 | FINLAND-EN50549-LV230 | Finland power grid | - | - | - | Supported | Supported | - | Supported | Supported |
| 186 | ANRE-TYPEB | Romania power grid (type B) | - | - | - | Supported | Supported | Supported | Supported | Supported |
| 187 | ANRE-TYPEB-MV480 | Romania power grid (type B) | - | - | - | Supported | Supported | Supported | Supported | Supported |
| Note a: The Czech Republic grid code requires that the inverter be subject to dispatching by the electric power company through DI. For details, see **G Dry Contact Scheduling**. | | | | | | | | | | |


Copyright © Huawei Technologies Co., Ltd.

# B Device Commissioning

**Step 1** Access **Device commissioning** screen.

**Figure B-1** Method 1: before login (not connected to the Internet)

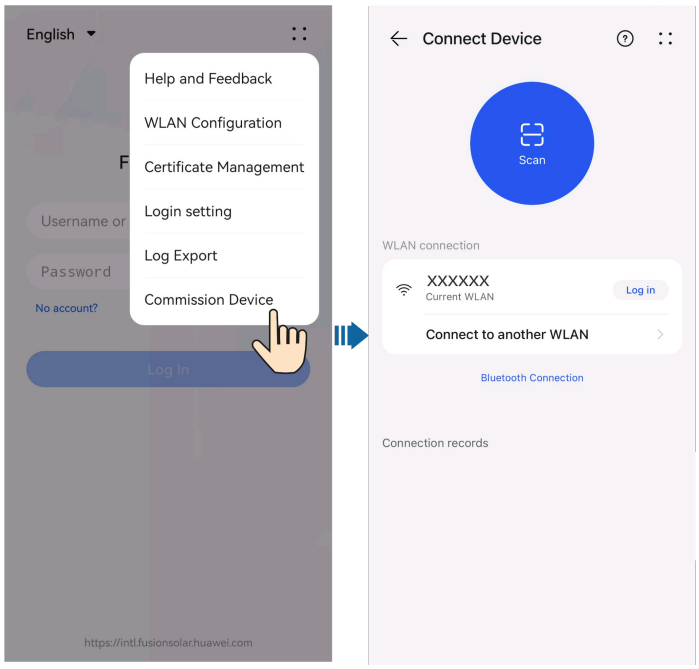


 Copyright © Huawei Technologies Co., Ltd. 

**Figure B-2** Method 2: after login (connected to the Internet)

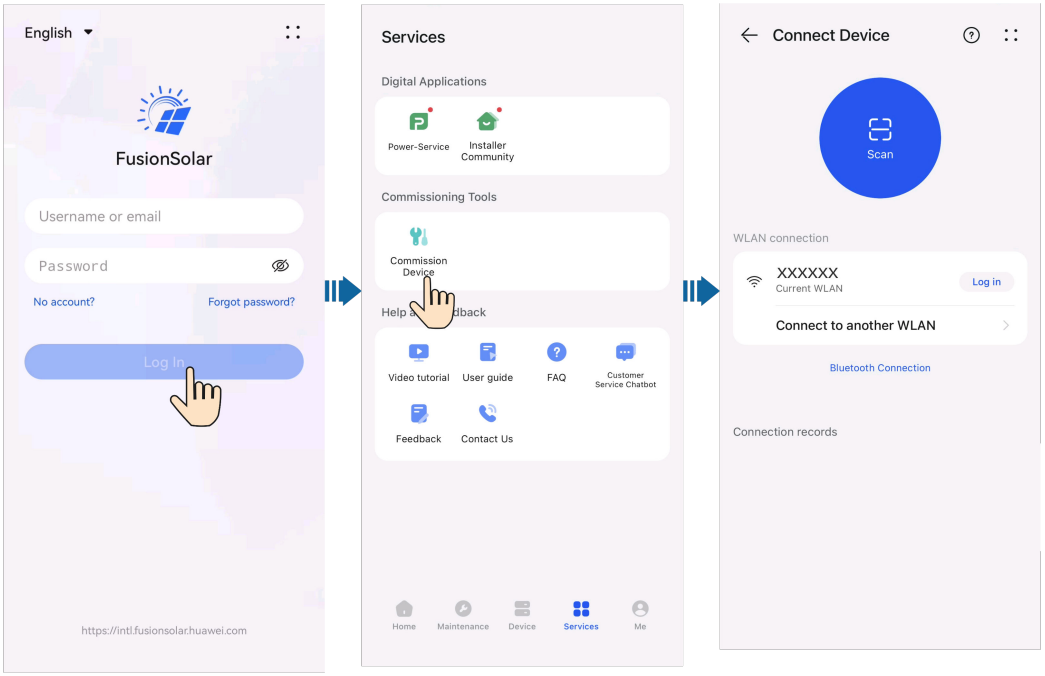


**Step 2** Connect to the solar inverter WLAN and log in to the device commissioning screen as the **installer** user.

**NOTICE**

- When connecting to the SUN2000 directly from the mobile phone, keep the mobile phone visible within 3 meters of the SUN2000 to ensure the communication quality between the app and SUN2000. The distances are for reference only and may vary with mobile phones and shielding conditions.
- When connecting the SUN2000 to the WLAN over a router, ensure that the mobile phone and SUN2000 are in the WLAN coverage of the router and the SUN2000 is connected to the router.
- The router supports WLAN (IEEE 802.11 b/g/n, 2.4 GHz) and the WLAN signal reaches the SUN2000.
- The WPA, WPA2, or WPA/WPA2 encryption mode is recommended for routers. Enterprise-level encryption is not supported (for example, public hotspots requiring authentication such as airport WLAN). WEP and WPA TKIP are not recommended because these two encryption modes have serious security defects. If the access fails in WEP mode, log in to the router and change the encryption mode of the router to WPA2 or WPA/WPA2.

 Copyright © Huawei Technologies Co., Ltd. 

**NOTE**

- Obtain the initial password for connecting to the solar inverter WLAN from the label on the side of the solar inverter.
- Use the initial password upon first power-on and change it immediately after login. To ensure account security, change the password periodically and keep the new password in mind. Not changing the initial password may cause password disclosure. A password left unchanged for a long period of time may be stolen or cracked. If a password is lost, devices cannot be accessed. In these cases, the user is liable for any loss caused to the PV plant.
- When you access the **Device commissioning** screen of the SUN2000 for the first time, you need to manually set the login password because the SUN2000 does not have an initial login password.

**----End**

 Copyright © Huawei Technologies Co., Ltd. 

# C Built-in PID Recovery

**NOTICE**

Ensure that the inverter PE cable is securely connected. Otherwise, the built-in PID recovery function may be unavailable and electric shocks may occur.

## Procedure

**Step 1** On the home screen, choose **Settings** > **Feature parameters** and set related parameters.

**Figure C-1** Setting PID suppression parameters

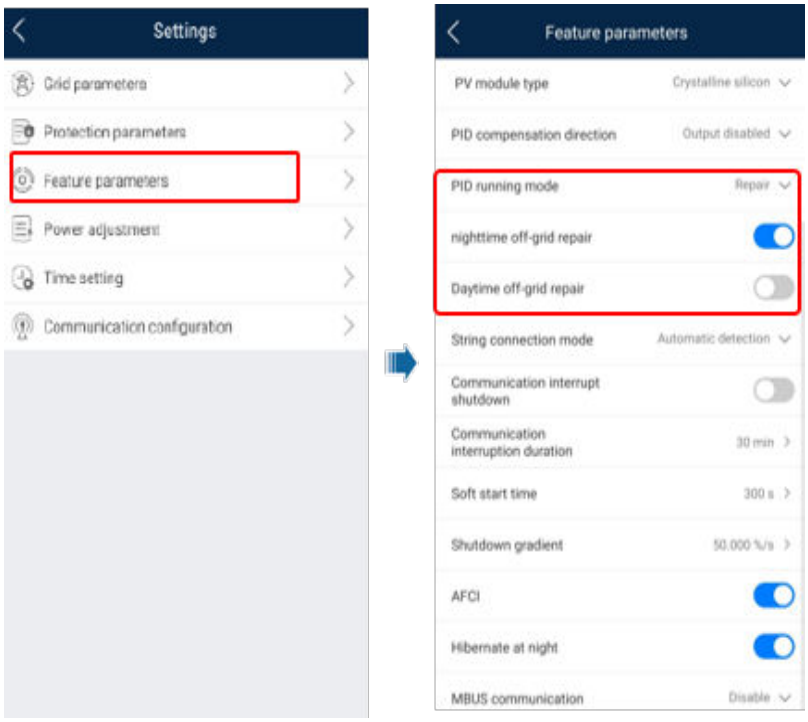


 Copyright © Huawei Technologies Co., Ltd. 

NOTE

- Set **Built-in PID running mode** to **Repair** (**Disable** by default).
- Set **Nighttime off-grid repair** to . (This parameter is displayed when **Built-in PID running mode** is set to **Repair**.)

**----End**

# D Rapid Shutdown

If optimizers are configured for all PV modules, the PV system can perform a rapid shutdown to decrease the output voltage to below 30 V within 30s. The rapid shutdown function is supported only if optimizers are configured for all PV modules.

Perform the following steps to trigger a rapid shutdown:

- Method 1 (recommended): Turn off the AC switch between the inverter and the power grid.
- Method 2: Turn off the DC switch at the bottom of the inverter.
- Method 3: If the DIN5 port (pin 15) of the inverter communications terminal is connected to a rapid shutdown switch, press the switch to trigger a rapid shutdown.

  **NOTE**

  Log in to the FusionSolar app as an installer, choose **Services** > **Device commissioning**, and connect to the WLAN hotspot of the inverter. Log in to the local commissioning system as an installer, choose **Settings** > **Feature parameters** > **Dry contact function**, and set **Dry contact function** to **DI rapid shutdown**.
- Method 4: If **AFCI** is enabled, the inverter automatically performs arc fault detection and triggers a rapid shutdown when AFCI lock protection is implemented.

 Copyright © Huawei Technologies Co., Ltd. 

# E NS Protection

## Connecting NS Protection Signal Cables to Inverters

NOTE

- The NS protection function applies to areas complying with the VDE 4105 standard. The grid code must be set to **VDE-AR-N-4105**.
- Connect the NS protection switch to GND (pin 13) and DIN5 (pin 15). The switch is turned on by default. When the switch is turned off, NS protection is triggered.
- Rapid shutdown and NS protection use the same pins, which are GND (pin 13) and DIN5 (pin 15). Therefore, you can use only either of the functions.
- The cable connection method for a single inverter is the same as that for cascaded inverters. For a single inverter, connect GND and DIN5 to the same cable.
- Log in to the FusionSolar app as an installer, choose **Services** > **Device commissioning**, and connect to the WLAN hotspot of the inverter. Log in to the local commissioning system as an installer, choose **Settings** > **Feature parameters** > **Dry contact function**, and set **Dry contact function** to **NS protection**. To enable NS protection for multiple inverters, set **Dry contact function** to **NS protection** for each inverter.

**Figure E-1** Connecting cascaded inverters to the NS protection switch

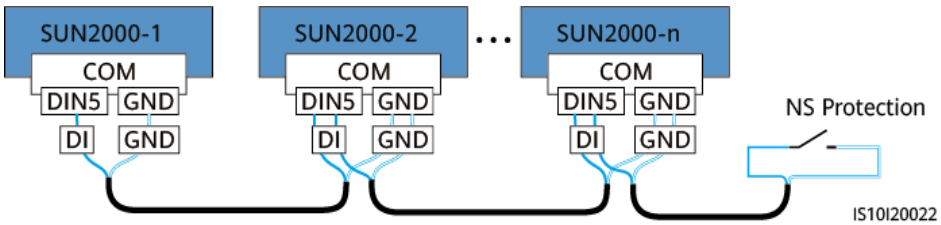


 Copyright © Huawei Technologies Co., Ltd. 

# F Resetting a Password

**Step 1** Check that the AC and DC sides of the inverter are both powered on, and indicators and are steady green or blinking slowly for more than 3 minutes.

**Step 2** Turn off the AC switch, set the DC SWITCH at the bottom of the inverter to OFF, and wait until all LED indicators on the inverter panel turn off.

**Step 3** Complete the following operations within 3 minutes:

1. Turn on the AC switch and wait until the inverter indicator blinks.
2. Turn off the AC switch and wait until all LED indicators on the inverter panel turn off.
3. Turn on the AC switch and wait until all LED indicators on the inverter panel blink and then turn off after about 30s.

**Step 4** Wait until the three green LEDs on the inverter panel blink fast and then the three red LEDs blink fast, which indicates that the password is restored.

**Step 5** Reset the password within 10 minutes. (If no operation is performed within 10 minutes, all parameters of the inverter remain unchanged.)

1. Wait until the indicator blinks.
2. Connect to the app using the initial WLAN hotspot name (SSID) and initial password (PSW), which can be obtained from the label on the side of the inverter.
3. On the login screen, set a new password and log in to the app.

**Step 6** Set router and management system parameters to implement remote management.

**----End**

**NOTICE**

You are advised to reset the password in the morning or at night when the solar irradiance is low.

 Copyright © Huawei Technologies Co., Ltd. 

# G Dry Contact Scheduling

**NOTICE**

In the inverter parallel connection scenario, log in to the inverter connected to the Smart Dongle to set parameters.

## Function

This function applies to scenarios where the grid company performs remote scheduling through dedicated ripple control receivers. The grid company remotely sends a scheduling command (%) to the plant with a wireless transmitting apparatus. Then, the wireless receiving apparatus receives the scheduling command and converts it into a DI signal. The plant monitoring device controls the inverter to output the corresponding power.

Ensure that the inverter is correctly connected to the ripple control receiver when setting this function. (In Germany and some other European areas, the grid company uses the ripple control receiver to convert a power grid scheduling signal to a dry contact signal, and the power plant uses a dry contact to receive the signal.)

**NOTE**

When the functions of the limited feed-in and scheduling via the DI port are enabled at the same time, the system calculates the output power thresholds for both functions respectively, and then sends the smaller value to the inverter.

## Procedure

1. Log in to the inverter local commissioning screen.
2. Choose **Settings** > **Power adjustment** and enable **Dry contact scheduling**.
3. Tap **Dry contact scheduling settings** and set related parameters as prompted.

 Copyright © Huawei Technologies Co., Ltd. 

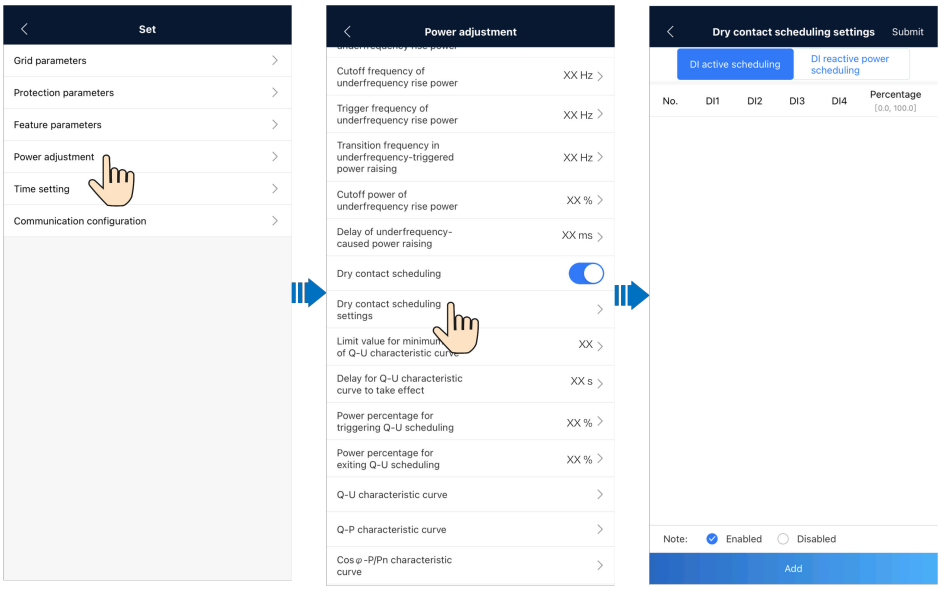


| Parameter | Description |
|---|---|
| **DI active scheduling** | Sets the DI scheduling signals and the corresponding active output power percentage levels. |
| **DI reactive power scheduling** | Sets the DI scheduling signals and the corresponding reactive output power percentage levels. |

NOTE

- The two scheduling modes support 16 levels of percentages. The percentage levels of DI1–DI4 must differ from each other. Otherwise, an exception will occur during command parsing.
- If the actual input DI signal is inconsistent with the setting, an **Abnormal DI Instruction** alarm will be generated.

 Copyright © Huawei Technologies Co., Ltd. 

# H Setting the Current Threshold for Triggering RCD Protection

## Function

A residual current device (RCD) detects residual current (that is, leakage current of an electrical system to ground), and automatically disconnects a circuit from its power supply when residual current exceeds the preset threshold.

**NOTICE**

- If the current threshold for triggering RCD protection is set to a smaller value, the device is more likely to be shut down due to RCD protection. Exercise caution when setting this parameter.
- Adjusting the current threshold for triggering RCD protection may cause the device to frequently trigger the protection mechanism. In this case, you can increase the threshold to disable the protection mechanism. Exercise caution when setting this parameter. If you have any questions, contact the vendor or manufacturer.

## Procedure

1. Log in to the inverter local commissioning screen.
2. Choose **Settings** > **Feature parameters** > **Current Threshold for Triggering RCD Protection**. Set **Current Threshold for Triggering RCD Protection** as required.

 Copyright © Huawei Technologies Co., Ltd. 

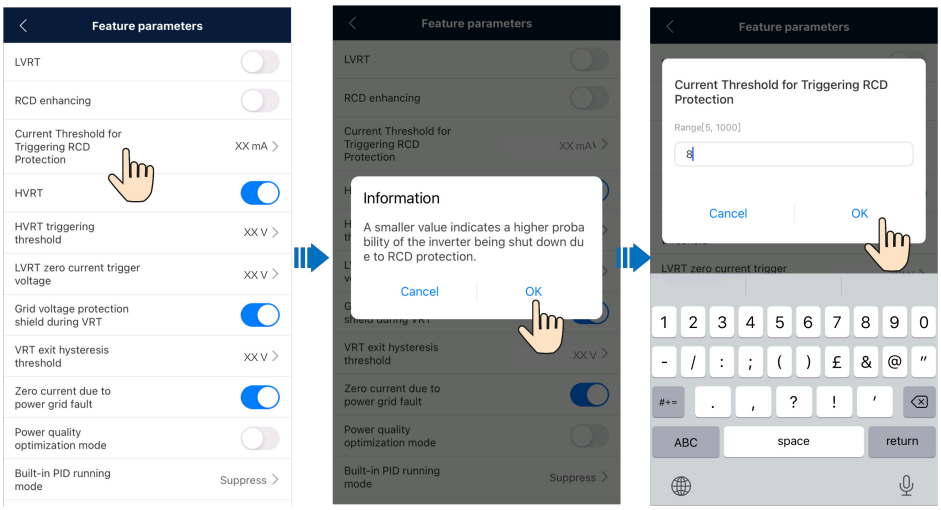


 Copyright © Huawei Technologies Co., Ltd. 

# I AFCI

## Function

If PV modules or cables are not properly connected or damaged, electric arcs may occur, which may cause fire. Huawei inverters provide unique arc detection in compliance with UL 1699B-2018 to ensure the safety of users' lives and property.

This function is enabled by default. The inverter automatically detects arc faults. To disable this function, log in to the FusionSolar App, enter the **Device Commissioning** screen, choose **Settings** > **Feature parameters**, and disable **AFCI**.

**NOTE**

The AFCI function works only with Huawei optimizers or ordinary PV modules, but does not support third-party optimizers or intelligent PV modules.

## Clearing Alarms

The AFCI function involves the **DC arc fault** alarm.

The inverter has the AFCI alarm automatic clearance mechanism. If an alarm is triggered for less than five times within 24 hours, the inverter automatically clears the alarm. If the alarm is triggered for five times or more within 24 hours, the inverter locks for protection. You need to manually clear the alarm on the inverter so that it can work properly.

You can manually clear the alarm as follows:

- **Method 1**: FusionSolar App

  Log in to the FusionSolar App and choose **Me** > **Device commissioning**. On the **Device commissioning** screen, connect and log in to the inverter that generates the AFCI alarm, tap **Alarm management**, and tap **Clear** on the right of the **DC arc fault** alarm to clear the alarm.

 Copyright © Huawei Technologies Co., Ltd. 

**Figure I-1** Alarm management

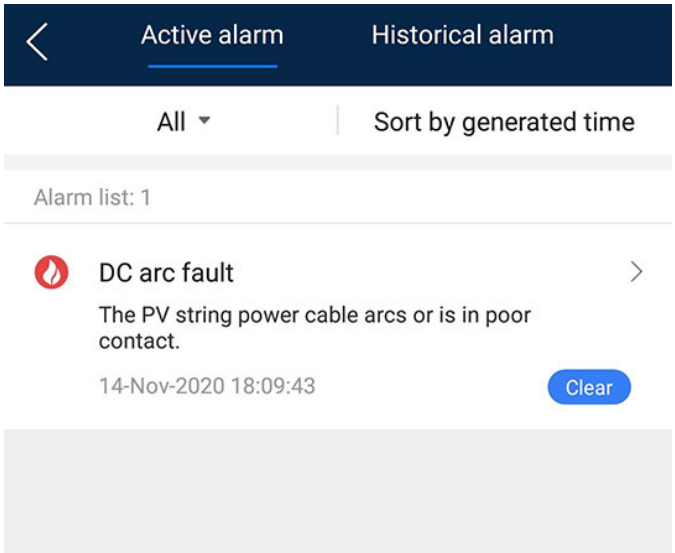


- **Method 2**: FusionSolar Smart PV Management System

  Log in to the FusionSolar Smart PV Management System using a non-owner account, choose **Maintenance** > **Alarm Management**, select the **DC arc fault** alarm, and click **Clear** to clear the alarm.

**Figure I-2** Clearing alarms

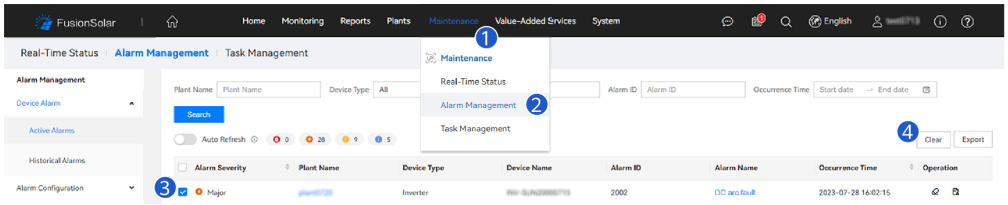


Switch to the owner account with PV plant management rights. On the home page, click the PV plant name to go to the PV plant page, and click **OK** as prompted to clear the alarm.

# J PV String Access Detection

This function is used to detect and identify the operating status of PV strings connected to an inverter. The status can be **Unidentified**, **Not connected**, **Single string**, **2-in-1 string**, **Lost string**, **2-in-1 string – full loss**, or **2-in-1 string – single string loss**. Enable this function if you need to detect the PV string status. Otherwise, disable this function.

## Function

- PV string access detection applies to large-scale commercial and utility-scale PV plants with PV strings facing the same direction.
- In AC or DC power limiting scenarios:
  - If the PV string access type is not identified, **PV Status** will be displayed as **Not connected**. The PV string access type can be identified only when the inverter restores to the non-power limiting state and the current of all connected PV strings reaches **Startup current**.
  - After setting parameters, you can view the PV string access status on the **Running Info** screen.

## Procedure

**Step 1** Log in to the FusionSolar app and choose **Services** > **Device Commissioning**. The **Device Commissioning** screen is displayed.

**Step 2** Choose **Maintenance** > **PV string access detection**. The parameter setting screen is displayed.

 Copyright © Huawei Technologies Co., Ltd. 

**Figure J-1** PV string access detection

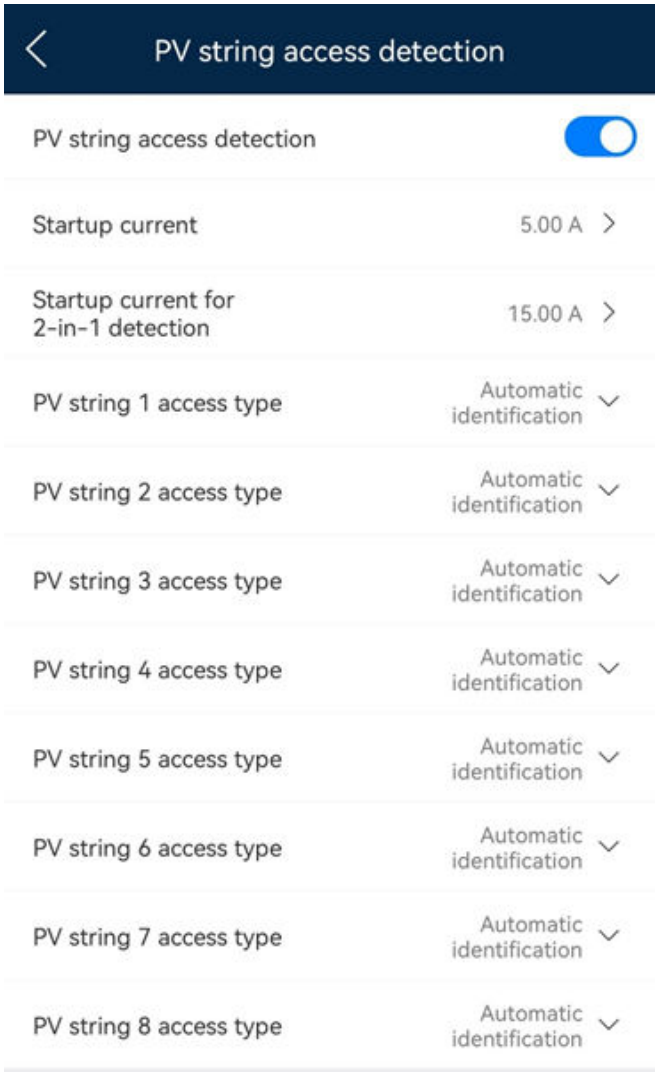


| No. | Parameter | Description | Remarks |
|---|---|---|---|
| 1 | **PV string access detection** | The default value of **PV string access detection** is **Disabled**. After the inverter connects to the power grid properly, you can set this parameter to **Enabled**. | - |
| 2 | **Startup current** | When the current of all connected PV strings reaches the preset value, the PV string access detection function is enabled.<br>**NOTE**<br>Startup current setting rules:<br>• Startup current = $I_{sc}$ ($S_{tc}$) x 0.6 (rounded up). For details about $I_{sc}$ ($S_{tc}$), see the PV module nameplate.<br>• Default startup current (5 A): applicable to the scenarios where the short-circuit current $I_{sc}$ ($S_{tc}$) is greater than 8 A for the monocrystalline and polycrystalline PV modules. | This parameter is displayed when **PV string access detection** is set to **Enabled**. |

| No. | Parameter | Description | Remarks |
|---|---|---|---|
| 3 | **Startup current for 2-in-1 detection** | When the current of a PV string reaches the threshold specified by **Startup current for 2-in-1 detection**, the PV string is automatically identified as 2-in-1.<br>The default value is recommended. | |
| 4 | PV string *N* access type<br>**NOTE**<br>*N* is the DC input terminal number of the inverter. | Set this parameter based on the type of the PV string connected to DC input terminal *N* of the inverter. Currently, the options are as follows: **Automatic identification** (default value), **Not connected**, **Single string**, and **2-in-1 string**.<br>The default value is recommended. If the value is incorrectly set, the PV string access type may be incorrectly identified and false alarms may be generated for the PV string access status. | |

**----End**

 Copyright © Huawei Technologies Co., Ltd. 

# K Smart I-V Curve Diagnosis

For details, see **iMaster NetEco V600R023C00 Smart I-V Curve Diagnosis User Manual**.

 Copyright © Huawei Technologies Co., Ltd. 

# L Locating Insulation Resistance Faults

If the ground impedance of a PV string connected to the inverter is too low, the inverter generates a **Low insulation resistance** alarm.

The possible causes are as follows:

- A short circuit has occurred between the PV array and the ground.
- The ambient air of the PV array is damp and the insulation between the PV array and the ground is poor.

After the **Low insulation resistance** alarm is reported by the inverter, insulation resistance fault location is automatically triggered. If the fault location is successful, the location information is displayed on the **Alarm details** screen of the **Low insulation resistance** alarm on the FusionSolar app.

Log in to the FusionSolar app, choose **Alarm** > **Active alarm**, select **Low insulation resistance** to enter the **Alarm details** screen.

**Figure L-1** Alarm details

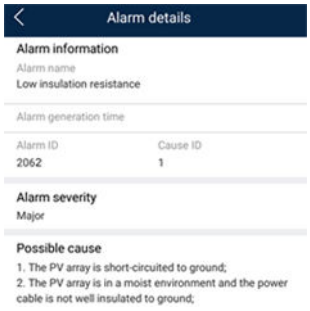


 Copyright © Huawei Technologies Co., Ltd. 

NOTE

- The positive and negative terminals of a PV string are respectively connected to the PV+ and PV– terminals of the inverter. The PV– terminal represents a possibility of 0% for the short-circuit position and the PV+ terminal represents a possibility of 100% for the short-circuit position. Other percentages indicate that the fault occurs on a PV module or cable in the PV string.
- Possible fault position = Total number of PV modules in a PV string x Percentage of possible short-circuit positions. For example, if a PV string consists of 14 PV modules and the percentage of the possible short-circuit position is 34%, the possible fault position is 4.76 (14 x 34%), indicating that the fault is located near PV module 4, including the previous and the next PV modules and the cables. The inverter has a detection precision of ±1 PV module.
- The possible faulty PV string MPPT1 corresponds to PV1 and PV2, and the possible faulty PV string MPPT2 corresponds to PV3 and PV4. The fault can be located only to the MPPT level. Perform the following steps to connect the PV strings corresponding to the faulty MPPT to the inverter one by one to further locate and rectify the fault.
- When a non-short-circuit fault occurs, the possible short-circuit percentage is not displayed. If the insulation resistance is greater than 0.001 MΩ, the fault is not related to short circuit. Check all PV modules in the faulty PV string one by one to locate and rectify the fault.

**Figure L-2** Percentage of short-circuit positions

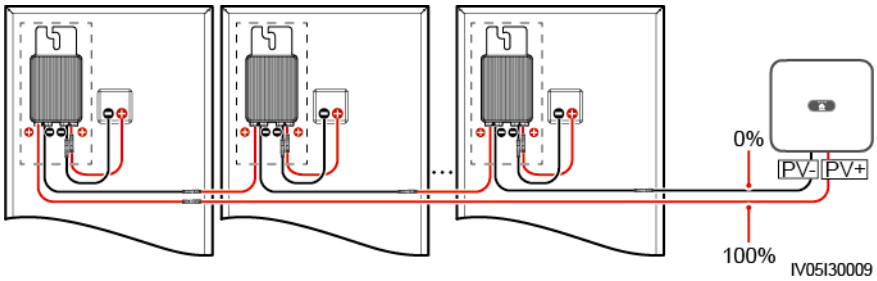


## Procedure

NOTICE

If the irradiance or the PV string voltage is too high, the insulation resistance fault location may fail. In this case, the fault location status on the **Alarm details** screen is **Conditions not met**. Perform the following steps to connect PV strings to the inverter one by one to locate the fault. If the system is not configured with any optimizer, skip the corresponding optimizer operations.

**Step 1** Ensure that the AC connections are normal. Log in to the FusionSolar app, choose **Maintenance** > **Inverter ON/OFF** on the home screen, and send a shutdown command. Set **DC SWITCH** to **OFF**.

**Step 2** Connect one PV string to the inverter, and set **DC SWITCH** to **ON**. If the inverter status is **Shutdown: Command**, log in to the app, choose **Maintenance** > **Inverter ON/OFF** on the home screen, and send a startup command.

**Step 3** Choose **Alarm** on the home screen, enter the **Active alarm** screen, and check whether a **Low insulation resistance** alarm is reported.

 Copyright © Huawei Technologies Co., Ltd. 

- If no **Low insulation resistance** alarm is reported 1 minute after the DC side is powered on, choose **Maintenance** > **Inverter ON/OFF** on the home screen, and send a shutdown command. Set **DC SWITCH** to **OFF**. Go to **Step 2** and check rest of the PV strings one by one.
- If a **Low insulation resistance** alarm is reported 1 minute after the DC side is powered on, check the percentage of possible short-circuit positions on the **Alarm details** screen and calculate the location of the possible faulty PV module based on the percentage. Then go to **Step 4**.

**Step 4** Log in to the app, choose **Maintenance** > **Inverter ON/OFF** on the home screen, and send a shutdown command. Set **DC SWITCH** to **OFF**. Check whether the connectors or DC power cables between the optimizer and PV module, between adjacent PV modules, or between adjacent optimizers on the possible fault position are damaged.

- If yes, replace the damaged connectors or DC power cables, and then set **DC SWITCH** to **ON**. If the inverter status is **Shutdown: Command**, choose **Maintenance** > **Inverter ON/OFF**, and send a startup command. View alarm information.
  - If no **Low insulation resistance** alarm is reported 1 minute after the DC side is powered on, troubleshoot the insulation resistance fault of the PV string. Log in to the app, choose **Maintenance** > **Inverter ON/OFF** on the home screen, and send a shutdown command. Set **DC SWITCH** to **OFF**. Go to **Step 2** and check rest of the PV strings one by one. Then, go to **Step 8**.
  - If the DC side is powered on 1 minute later, the **Low insulation resistance** alarm is still reported. Log in to the app, choose **Maintenance** > **Inverter ON/OFF** on the home screen, and send a shutdown command. Set **DC SWITCH** to **OFF** and go to **Step 5**.
- If no, go to **Step 5**.

**Step 5** Disconnect the possible faulty PV module and the paired optimizer from the PV string, and use a DC extension cable with an MC4 connector to connect the PV module or optimizer adjacent to the possible faulty PV module. Set **DC SWITCH** to **ON**. If the inverter status is **Shutdown: Command**, choose **Maintenance** > **Inverter ON/OFF** on the home screen, and send a startup command. View alarm information.

- If no **Low insulation resistance** alarm is reported 1 minute after the DC side is powered on, the fault occurred on the disconnected PV module and optimizer. Choose **Maintenance** > **Inverter ON/OFF**, send a shutdown command, and set **DC SWITCH** to **OFF**. Go to **Step 7**.
- If the **Low insulation resistance** alarm is reported 1 minute after the DC side is powered on, the fault did not occur on the disconnected PV module and optimizer. Go to **Step 6**.

**Step 6** Log in to the app, choose **Maintenance** > **Inverter ON/OFF** on the home screen, and send a shutdown command. Set **DC SWITCH** to **OFF**, reconnect the disconnected PV module and optimizer, and repeat **Step 5** to check the PV modules and optimizers adjacent to the possible fault location.

**Step 7** Determine the position of the ground insulation fault:

- Disconnect the possible faulty PV module from the optimizer.

 Copyright © Huawei Technologies Co., Ltd. 

- Connect the possible faulty optimizer to the PV string.
- Set **DC SWITCH** to **ON**. If the inverter status is **Shutdown: Command**, choose **Maintenance** > **Inverter ON/OFF**, and send a startup command. View alarm information.
  - If no **Low insulation resistance** alarm is reported 1 minute after the DC side is powered on, the fault is on the possible faulty PV module.
  - If the **Low insulation resistance** alarm is reported 1 minute after the DC side is powered on, the fault is on the possible faulty optimizer.
- Log in to the app, choose **Maintenance** > **Inverter ON/OFF** on the home screen, and send a shutdown command. Set **DC SWITCH** to **OFF**, replace the faulty component, and complete troubleshooting the insulation resistance fault. Go to **Step 2** and check rest of the PV strings one by one. Then, go to **Step 8**.

**Step 8** Set **DC SWITCH** to **ON**. If the inverter status is **Shutdown: Command**, choose **Maintenance** > **Inverter ON/OFF**, and send a startup command.

**----End**

 Copyright © Huawei Technologies Co., Ltd. 

# M Contact Information

If you have any questions about this product, please contact us.

https://digitalpower.huawei.com

Path: **About Us** > **Contact Us** > **Service Hotlines**

To ensure faster and better services, we kindly request your assistance in providing the following information:

- Model
- Serial number (SN)
- Software version
- Alarm ID or name
- Brief description of the fault symptom

 Copyright © Huawei Technologies Co., Ltd. 

**NOTE**

EU Representative Information: Huawei Technologies Hungary Kft.
Add.: HU-1133 Budapest, Váci út 116-118., 1. Building, 6. floor.
Email: hungary.reception@huawei.com

# N Digital Power Customer Service

https://digitalpower.huawei.com/robotchat/

 Copyright © Huawei Technologies Co., Ltd. 

# O Acronyms and Abbreviations

| | |
|---|---|
| **A** | |
| **AFCI** | arc-fault circuit interrupter |
| **L** | |
| **LED** | light emitting diode |
| **M** | |
| **MBUS** | monitoring bus |
| **MPP** | maximum power point |
| **MPPT** | maximum power point tracking |
| **P** | |
| **PE** | protective earthing |
| **PID** | potential induced degradation |
| **PV** | photovoltaic |
| **R** | |
| **RCD** | residual current device |

 Copyright © Huawei Technologies Co., Ltd. 